GUILD ◆ EDITION

Woodsmith®

Woodsmith.com

Vol. 42 / No. 250

ENGLISH WORKBENCH

Also:

Special-Purpose
Router Bits

Great Gear
Smartphone Apps

Shop-Tested Tips for:
- Avoiding Kickback
- Power Sharpening
- Sanding Supplies

Woodpeckers® Precision Squares

The Most Trustworthy Tool in Your Shop

Success in the workshop depends on accuracy in your machinery set up, layout work, and assembly checks. All three jobs call for an accurate, well-made square, and here are several to choose from.

The cores of our squares are one precisely machined piece. ***Square*** is determined by our CNC milling centers and verified by our computer controlled optical inspection system. The cheeks added to this central core are narrower by a quarter of an inch, forming a shoulder not found in traditional square designs. The shoulder keeps your square on the edge of a board without a hand from you. We use this same fundamental design in squares from 6" to 26" and with two different core materials.

Our familiar anodized aluminum squares excel at checking cabinet and furniture assemblies as well as striking lines square. Our new durable, heat-treated stainless-steel squares, with their 1/16" thick blade and laser cut scribing notches are ideal for critical measuring and marking tasks, machinery setup and checking the edges of stock.

The precise scale graduations on Woodpeckers squares are permanently laser-engraved, high contrast markings, designed to last for generations.

We guarantee our squares to ±0.0085° for the life of the tool. If you ever find your square outside that tolerance, we'll fix it or replace it.

UNMATCHED ACCURACY
LIFETIME
Woodpeckers
GUARANTEE
EST. 1988

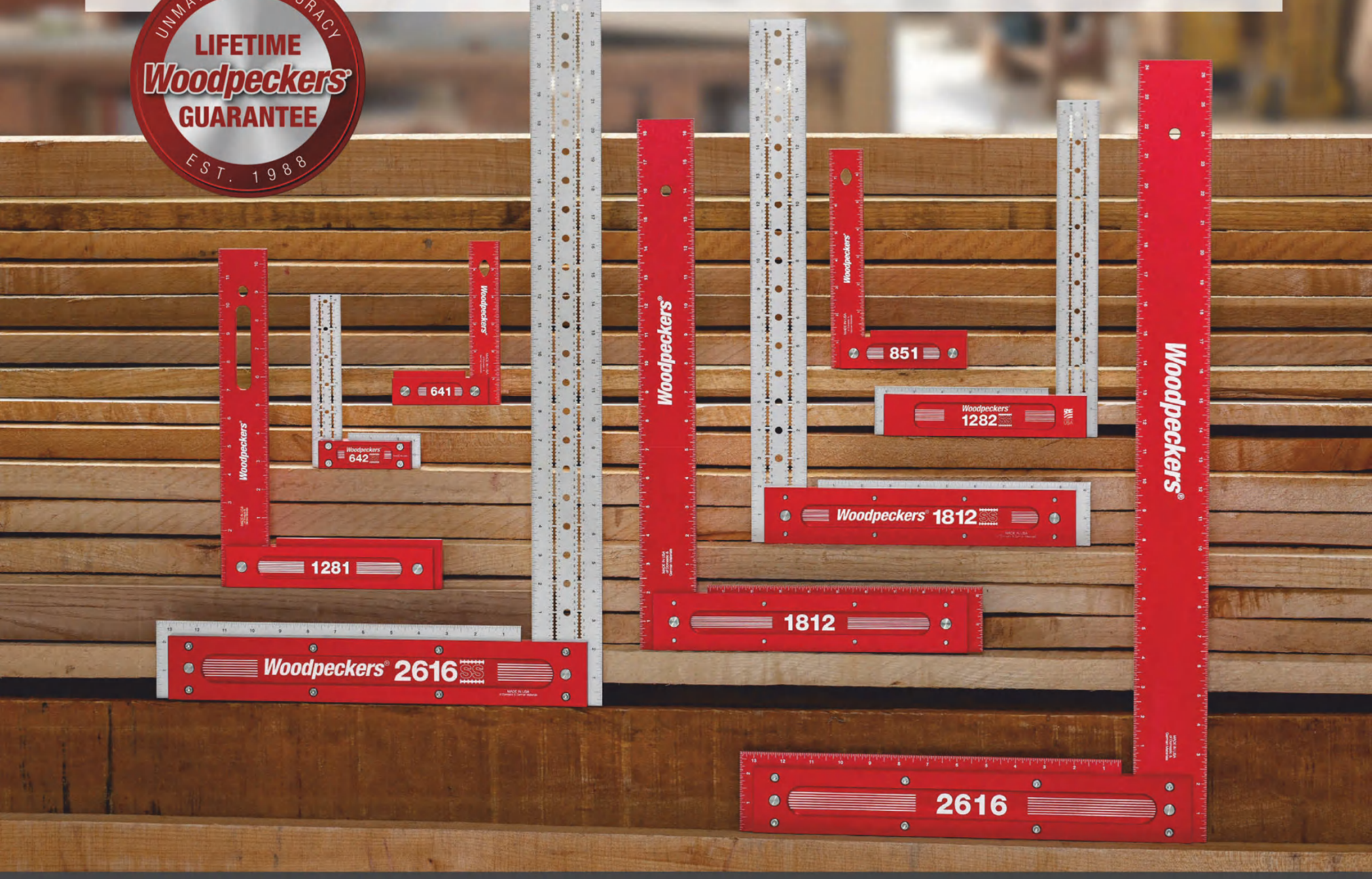

Woodpeckers, LLC • Strongsville, Ohio • 800.752.0725 • ***woodpeck.com***

from the editor

Sawdust

Tradition is a big part of why so many enjoy woodworking. It connects us with woodworkers who have come before us. Those connections take shape in the skills, tools, and even projects handed down from generation to generation. And we hope the projects we make will get passed down as well.

One tradition we have at Woodsmith is building a workbench to commemorate every 50th issue. And here we are at issue 250. Dillon Baker picked up the challenge for the design. He selected an English-style workbench that you can see on page 34. Like most bench designs, the features evolved over centuries of refinement.

As a designer, Dillon's task is to translate those features into numbers and a clear process that allows you to make one for yourself confidently. It's a pretty impressive workbench with a unique look.

CONTRIBUTING EDITOR

James Hamilton is a woodworking instructor, author, video producer and publisher. For the last decade, he's been helping small-shop woodworkers work safer and improve their skills, their workspaces, and the satisfaction they draw from the craft. He loves history and believes life is richer when traditional handcrafts are passed from generation to generation.

Woodsmith SHOP

RIKON Kreg Old Masters

Major Program Underwriters

IOWA PBS Titebond THE PRO'S ADVANTAGE™

Sponsoring Station *Additional Funding*

Woodsmith®

EXECUTIVE EDITOR Phil Huber
ASSISTANT EDITORS Erich Lage, Logan Wittmer
CONTRIBUTING WRITERS Bryan Nelson, James Hamilton

EXECUTIVE ART DIRECTOR Todd Lambirth
SENIOR ILLUSTRATOR Dirk Ver Steeg
SENIOR GRAPHIC DESIGNERS Bob Zimmerman, Becky Kralicek
CONTRIBUTING ILLUSTRATOR Erich Lage

CREATIVE DIRECTOR Chris Fitch
PROJECT DESIGNER Dillon Baker
PROJECT DESIGNER/BUILDER John Doyle
CAD SPECIALIST Steve Johnson
SHOP CRAFTSMAN Marc Hopkins

CONTRIBUTING PHOTOGRAPHERS Chris Hennessey, Jack Coyier

SENIOR ELECTRONIC IMAGE SPECIALIST Allan Ruhnke

GROUP MANAGER Brian VanHeuverswyn
ADVERTISING DIRECTOR Jack Christiansen
847-724-5633
JChristiansen@aimmedia.com
AD PRODUCTION COORDINATOR Kim Hoff

GROUP PRESIDENT Peter H. Miller

HOME GROUP
ACTIVE INTEREST MEDIA

Woodsmith® (ISSN 0164-4114) is published bimonthly by Cruz Bay Publishing, Inc., 2143 Grand Ave, Des Moines, IA 50312.
Woodsmith® is a registered trademark of Cruz Bay Publishing.

Copyright© 2020 Cruz Bay Publishing, Inc. An Active Interest Media Company. All rights reserved.

Subscriptions: Single copy: $6.95.
Canadian Subscriptions: Canada Post Agreement No. 40038201. Send change of address information to PO Box 881, Station Main, Markham, ON L3P 8M6. Canada BN 82564 2911
Periodicals Postage Paid at Des Moines, IA, and at additional offices.
Postmaster: Send change of address to *Woodsmith*, Box 37274, Boone, IA 50037-0274.

Printed in U.S.A.

WoodsmithCustomerService.com

ONLINE SUBSCRIBER SERVICES

- **VIEW** your account information
- **PAY** your bill
- **RENEW** your subscription
- **CHANGE** your mailing or e-mail address

CUSTOMER SERVICE Phone: 800-333-5075 weekdays

SUBSCRIPTIONS
Customer Service
P.O. Box 842
Des Moines, IA 50304-9961
subscriptions@augusthome.com

EDITORIAL
Woodsmith Magazine
2143 Grand Avenue
Des Moines, IA 50312
woodsmith@woodsmith.com

ACTIVE INTEREST MEDIA

PRESIDENT & CEO **Andrew W. Clurman**
SENIOR VICE PRESIDENT, TREASURER & CFO **Michael Henry**
SENIOR VICE PRESIDENT, OPERATIONS **Pat Fox**
VICE PRESIDENT, PRODUCTION & MANUFACTURING **Barb Van Sickle**
VICE PRESIDENT, PEOPLE & PLACES **JoAnn Thomas**
AIM BOARD CHAIR **Efrem Zimbalist III**

contents

No. 250 • Aug/Sept 2020

Projects

designer project
Candle Lanterns 22
Whether out on the deck or inside on a table, these lanterns make a bright addition to your home. And you can build them in just a weekend.

weekend project
Wine Rack 28
Try this compact serving and storage solution for keeping a few bottle of wine ready to hand. Learn some techniques for solid construction along the way.

shop project
English Workbench 34
This traditional English workbench is a time-tested workbench design. It's plank top, wide front apron, and stout base are ready to serve you for years.

outdoor project
Plywood Boat 44
Plywood construction, some epoxy, and a little bit of time are a small investment when compared to the sheer joy you'll have as you spend time on the water.

Departments

from our readers
Tips & Techniques 6

router workshop
Four Unique Router Bits 10

great gear
Woodworking Smartphone Apps 14

all about
Essential Sandpaper 18

woodworking technique
A Smooth Epoxy Finish 56

working with tools
Sharpening Carving Tools 58

mastering the table saw
Avoiding Kickback 62

question & answer
Top Options for Jig Runners 66

Sources 67

Innovative Products
SINCE 1989!

New

W1863 — 15" 3 HP PLANER W/ HELICAL CUTTERHEAD

- Max. stock width: 15"
- Maximum stock thickness: 6⅛"
- 3", 4-flute, helical cutterhead with 52 carbide inserts

W1812 — 7" 2 HP PLANER MOULDER W/ STAND

D3393 — ELLIPTICAL JIG

- Max. profile: 6¾" W x ¾" D
- Planing width: 7"
- Max. stock thickness: 7½"

PATENT OWNED BY WOODSTOCK INTERNATIONAL INC.

New

W1860 — 8" X 76" PARALLELOGRAM JOINTER W/ HELICAL CUTTERHEAD & MOBILE BASE

- Motor: 3 HP, 230V, single phase
- Total table size: 9" x 76"
- Fence size: 4½" x 38"

W1843 — KNIFE BELT SANDER/BUFFER

- Motor: 1 HP, 110V, 14A, 1725 RPM
- Belt size: 2" x 72"–76" range
- Left arbor: 1" x 8½" extension with ⅝" arbor

W1837 — 10" 2 HP HYBRID TABLE SAW W/EXTENSION TABLE & OPEN STAND

- Motor: 2 HP, 120V/240V, single-phase (prewired for 120V)
- Rip capacity: 30" to right, 15" to left
- Built-in mobile base

New

W1870 — 18" VS SCROLL SAW W/ LED AND ROTARY TOOL KIT

- Variable speed motor
- Cast iron table
- 1¼" dust port

20974WS

800-840-8420
shopfox.biz
SALES@WOODSTOCKINT.COM

WOODSTOCK INTERNATIONAL INC.

WHOLESALE ONLY
AVAILABLE FROM DEALERS NATIONWIDE
Please Visit Our Website Or Call Toll Free To Find An Authorized Dealer Near You

2 YEAR WARRANTY
SHOP FOX® machines are backed by a 2-Year Warranty!

SHOP FOX® is a registered trademark of Woodstock® International, Inc.

READER'S TIPS
Staff Edition

▲ The sanding drum is cut with a hole saw and has a steel rod epoxied through the center that seats in the bronze bushing.

▲ The base fits into the drill press table by utilizing a cleat the same size as the replaceable insert.

Drill Press Sanding Drum

In my garage shop, I'm often looking for ways to make tools multi-function. In some recent extended shop-time, I discovered a good way to upgrade my drill press sanding drum.

SANDING DRUM. While drill press drum sanders aren't new there are a few palces they fall short.The biggest is that they always seem to have some runout and flex a little. Plus, I always seem to have to cobble together an insert or a table so I can lower it all the way.

To fix that, I modified an insert for my drill press table (my table is from *WoodsmithPlans.com*). I made a table that attaches to the insert and allows the drum to be recessed. A bronze bushing stabilizes the drum to prevent wobbling. Then, I can make sanding drums of any size. The shaft of the sanding drum is held in the drill press chuck and spins inside the bronze bushing in the insert.

Phil Huber
Des Moines, Iowa

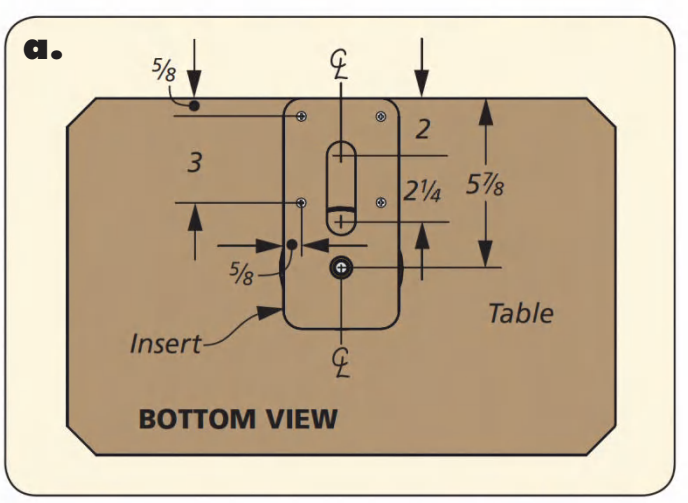

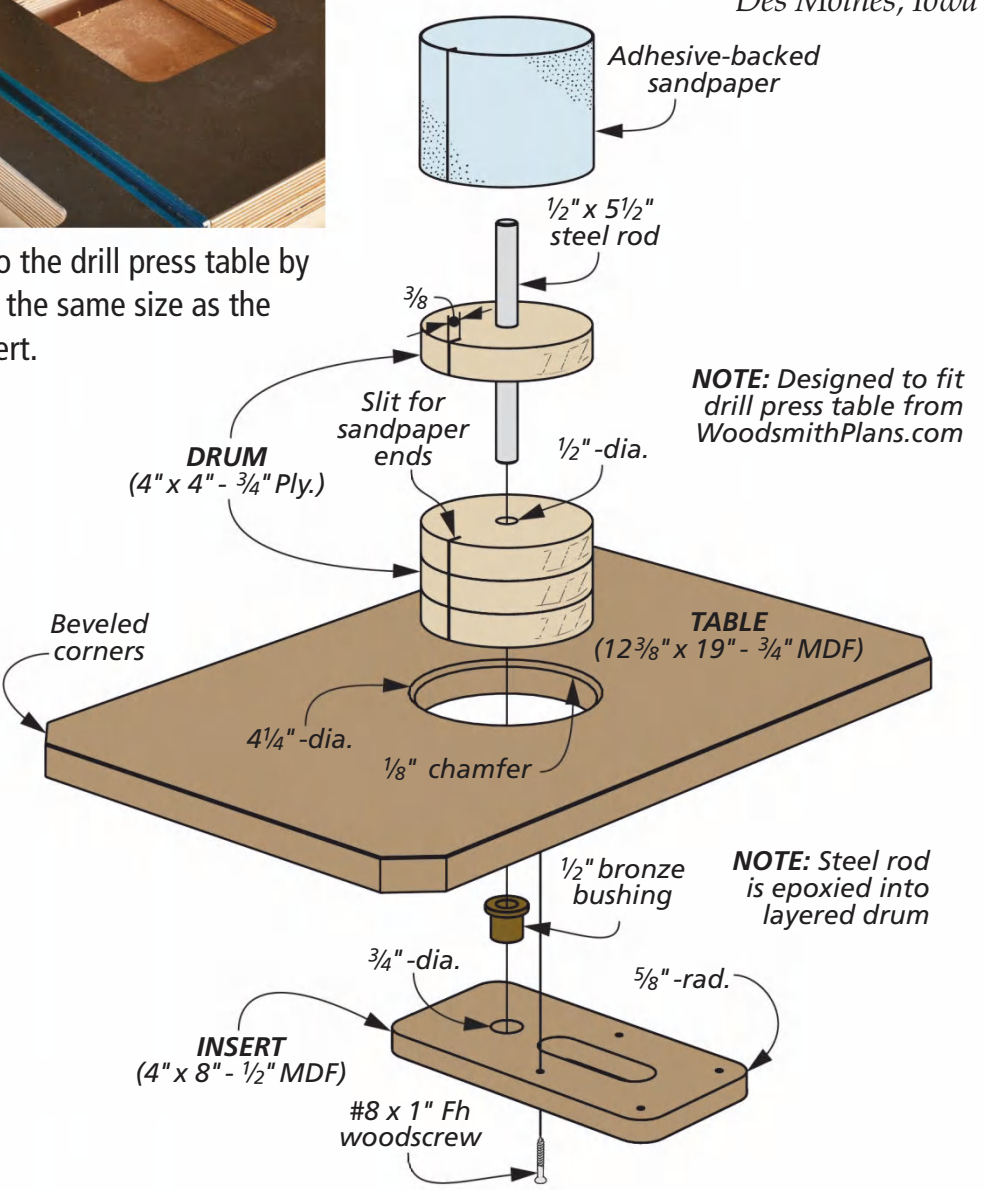

Pegboard on a Lazy Susan

A recent quarantine project of mine was creating some squirrel picnic tables. When it came to finishing them, I decided to repropose a lazy plywood lazy susan I had laying around.

PEGBOARD UPGRADE. As you can see in the photo, I used a piece of pegboard and glued it on top of the plywood. The pegboard holes fit sharpened dowels and they serve as finishing points. Then, depending on the project, I can put the dowels in different holes to hold items for finishing. The pegboard would work well even on a simple piece of plywood.

John Doyle
Ankeny, Iowa

Pencil Sharpen your Points

Recently, I was watching my Dad sharpen dowels into points using his pocket knife. That seemed silly because the dowels were almost the exact size of a pencil. So to help him out, I used a pencil sharpener to sharpen the rest of them in no time.

Claire Doyle
Ankeny, Iowa

SUBMIT A TIP TO WIN

GO ONLINE

If you have an original shop tip, we would like to hear from you and consider publishing your tip in one or more of our publications. So jump online and go to:

SubmitWoodsmithTips.com

You'll be able to tell us all about your tip and upload your photos and drawings. You can also mail your tips to "Woodsmith Tips" at the editorial address shown on page 2. We will pay up to $200 if we publish your tip.

Illustrations by: Becky Kralicek

GO 2 Online Extras

For additional drawings and dimensions for the can crusher, go to **Woodsmith.com/250**

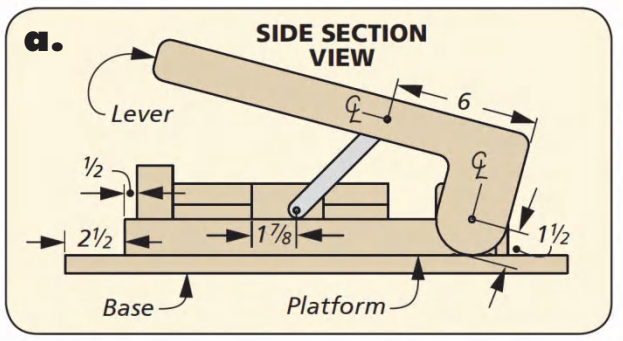

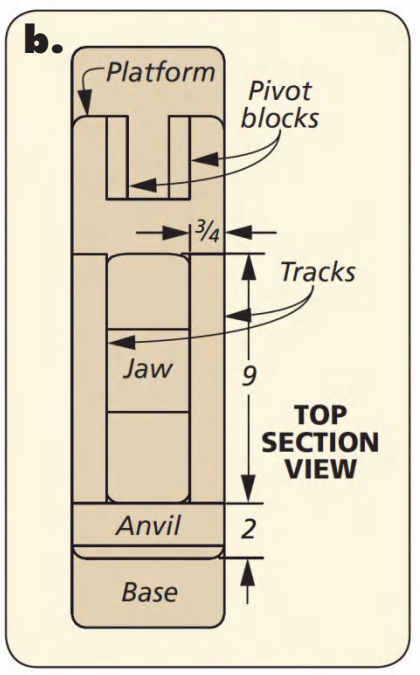

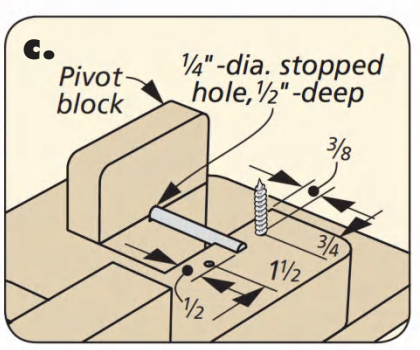

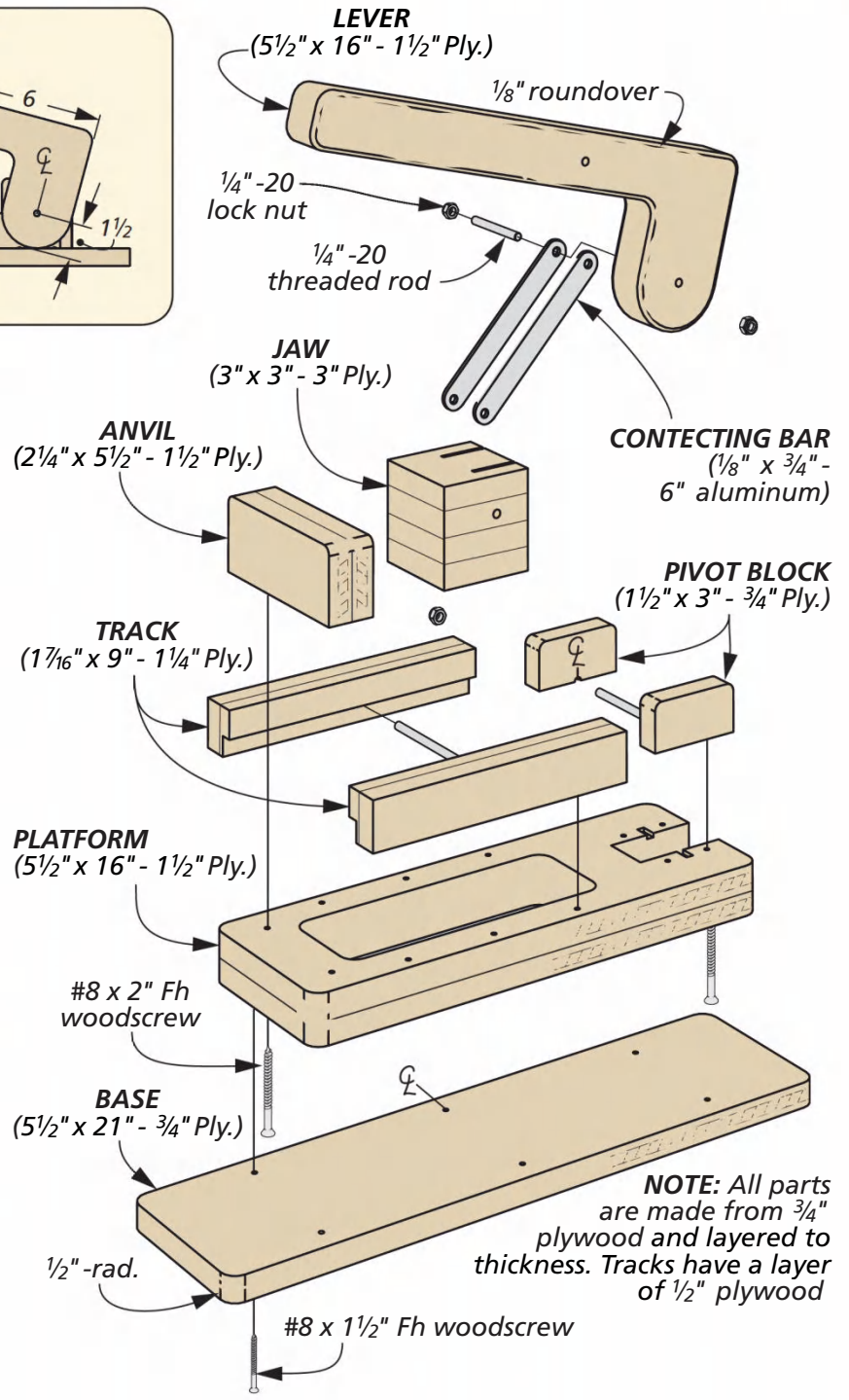

Can Crusher

Over the last few months, I've been on the lookout for shop projects to do with my kids. So consider this one a tip to get the kids building something.

CAN CRUSHER. As you can see, the crusher is built out of Baltic birch plywood. It consists of a jaw, anvil, track, and a foot lever. The parts are all easily cut at the band saw, which is okay for a kid to do with a little supervision. The lever is connected to the jaw with aluminum bars and a pivot pin. There's a handful of parts here, so for additional drawings and dimensions, visit *woodsmith.com/250*.

After the kids have assembled it, we hung it on a wall out in the shop near the recycle can. Then, for the next few hours, the kids ran around the house looking for every can they could find to crush and put in the recycle bin. So, this is not only a tip to get the kids in the shop, but to also help you clean up and keep them occupied.

John Doyle
Ankeny, Iowa

TOUGH
No Foam, Dries
Natural Color
GLUE

For the Toughest Jobs on Planet Earth®

Incredibly Strong for Wood Projects
Dries Natural Color No Foaming
Type II Use Indoor/Outdoor

www.gorillatough.com
©2020 The Gorilla Glue Company

Shop Must-Have: Chop Sticks?

A couple of years back, my wife and I hosted a holiday party. The catered Chinese food left me with great leftovers and hundreds of sets of chopsticks. I shoved them into my shop drawer, thinking I would come up with a use for them, and boy have I.

Not only do the chopsticks make perfect stir sticks for quart sized finish cans, but they're also a handy tool to mix epoxy with. The square end (where the pair is connected) allows you to really mix it up. Plus, it's an ideal tool to spread the epoxy as well.

Logan Wittmer
Runnells, Iowa

Ratchet Koozies

I discovered a quick tip that keeps my ratchet straps organized for whenever I need them. The rolled straps fit perfectly inside of a can koozie. It keeps them tangle free and organized for my next trip to the lumber yard.

Becky Kralicek
Des Moines, Iowa

DIGITAL WOODSMITH

RECEIVE FREE ETIPS BY EMAIL

Now you can have the best time-saving secrets, solutions, and techniques sent directly to your email inbox. Simply go to:

Woodsmith.com
and click on,

Woodsmith eTips

You'll receive one of our favorite tips by email each and every week.

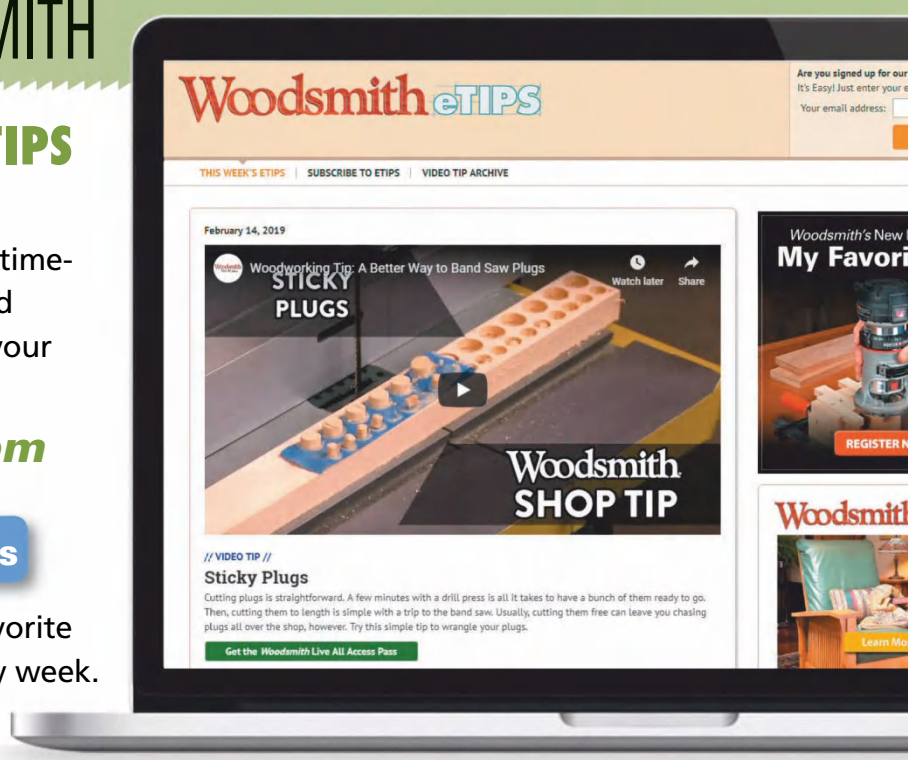

Unique Router Bits

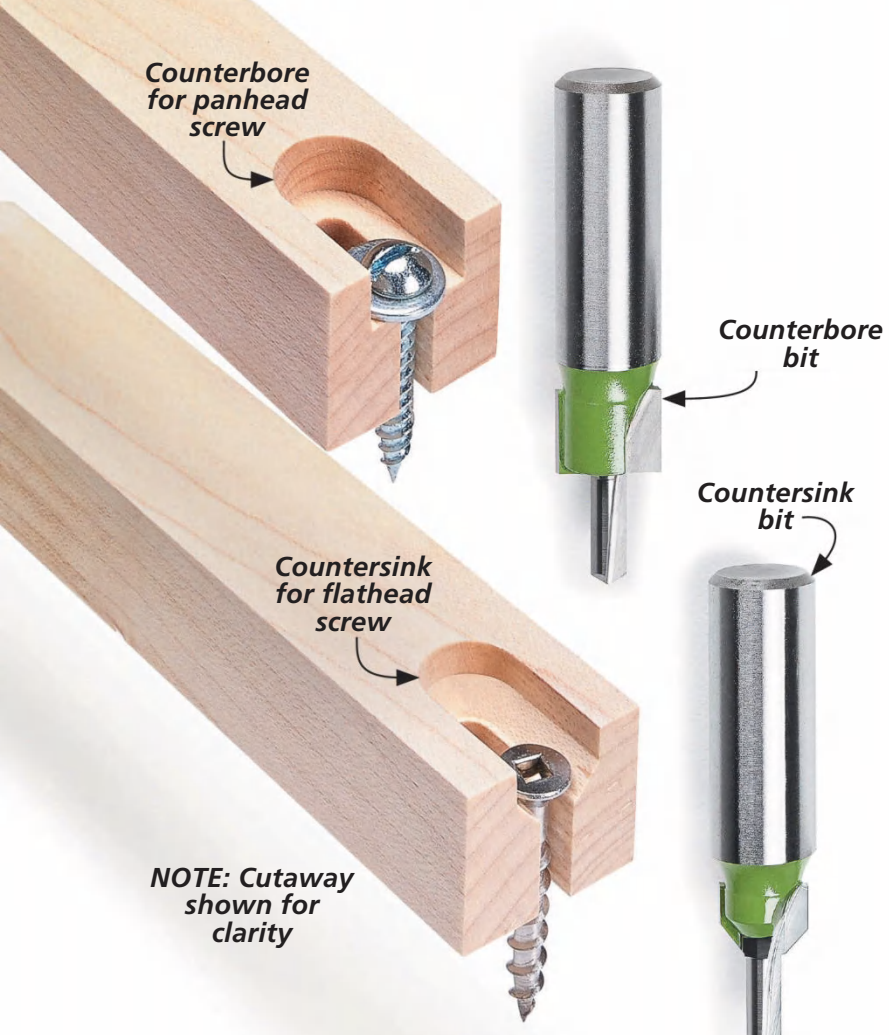

With these specialized router bits you can slots with either a coutersunk or counterbored profile.

Anyone who's been in our shop or seen one of our shop tour videos knows that we have a lot of router bits. And I mean a lot. Truth be told, some of them are for very specific operations. However, there are a few of these specialty bits that, quite honestly, work so well that they're worth the expense and the shop space. Let's take a look at a few of these unique bits.

SCREW SLOT BIT

The first unique bit that I really like is the type shown to the left. These are screw slot bits. They form slots in a workpiece for the shank of a screw to pass through while holding the head — all in one pass. You can see the bit in action in the main photo above.

THE USES. The main use behind a screw slot bit is to allow the screw to move along the length of the slot. This is particularly useful when you need to account for wood movement, such as attaching a table top. You can see this in the upper right photo on the next page.

These bits also work well for when you want something to be adjustable. A common use, at least in my shop, is creating adjustment slots in jigs. You can also make adjustable drawer runners, like you see in the photo on the next page.

TWO PART BIT. The bit works by combining two cutting sections. The first is a narrower straight cutter that creates the slot for the shank of the screw. The second is the wider cutter to make the slot for the head of the screw. These bits are available in two styles — a flat style (upper bit, left photo) for creating a slot for pan head or washers, and

Written by: Logan Wittmer

a v-cutter (lower bit) for normal flathead screws. Screw slot bits can be used in material up to 13⁄16" thick. One thing to keep in mind is that using thicker material results in a deeper countersink or counterbore.

With these specialized router bits you can make slots with either a coutersunk or counterbored profile.

SIMPLE TECHNIQUES. There are two quick and easy methods to put these bits to work — at the router table and using a hand-held router. I'll discuss the router table method here and the hand-held router in the box at the bottom of the page. The technique for creating a screw slot at the router table is pretty much the same as routing an ordinary straight-sided slot. You can see all the elements in action in the main photo on the previous page.

SOME SETUP. The process begins with a little layout and setup. After installing the bit in the router table, mark the centerline of the bit on the router table fence. You use this mark as a gauge to know where to start and stop moving the workpiece.

LAYOUT. On the face of the workpiece, draw lines to indicate the length of the slot. Remember, you're using the center of the bit as a reference. So you need to account for the radius of the bit when you mark the lines.

ROUTING. Turn on the router, brace the right end of the workpiece against the table, and line up the left layout line with the mark on the fence. Lower the workpiece down over the bit and rout until your layout line lines up with the bit line. Turn off the router and remove the workpiece after the bit stops spinning. Thick stock will require multiple passes, increasing the depth with each pass.

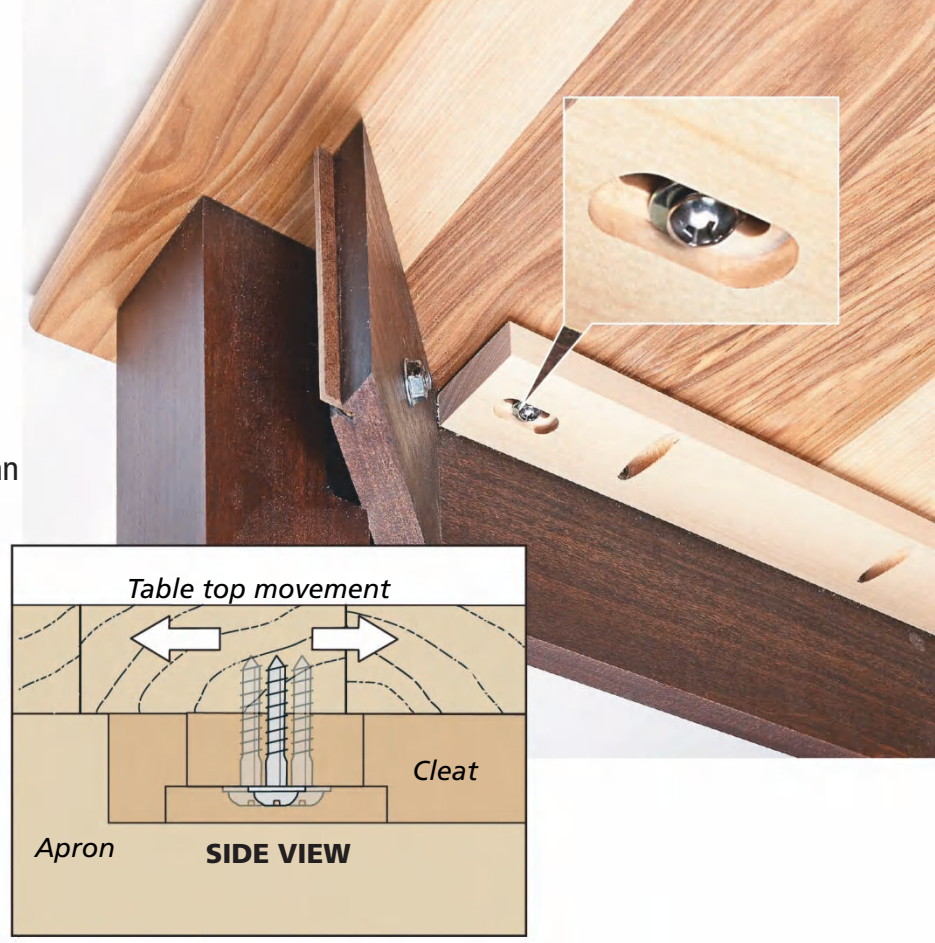

HAND-HELD ROUTER TECHNIQUE

When a workpiece is too large to bring to the router table, I'll often use a screw slot bit in my hand-held router. The process uses a guide bushing installed in the baseplate and an MDF template sized to the bushing. You can see these below. When using this process, the slot is routed from the top side unlike the router table process previously mentioned.

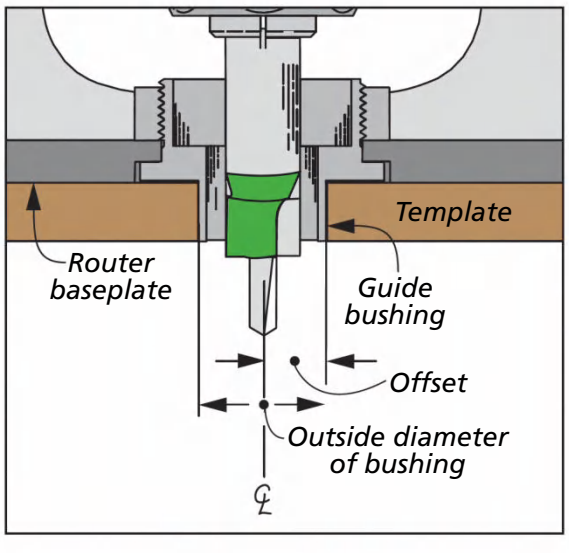

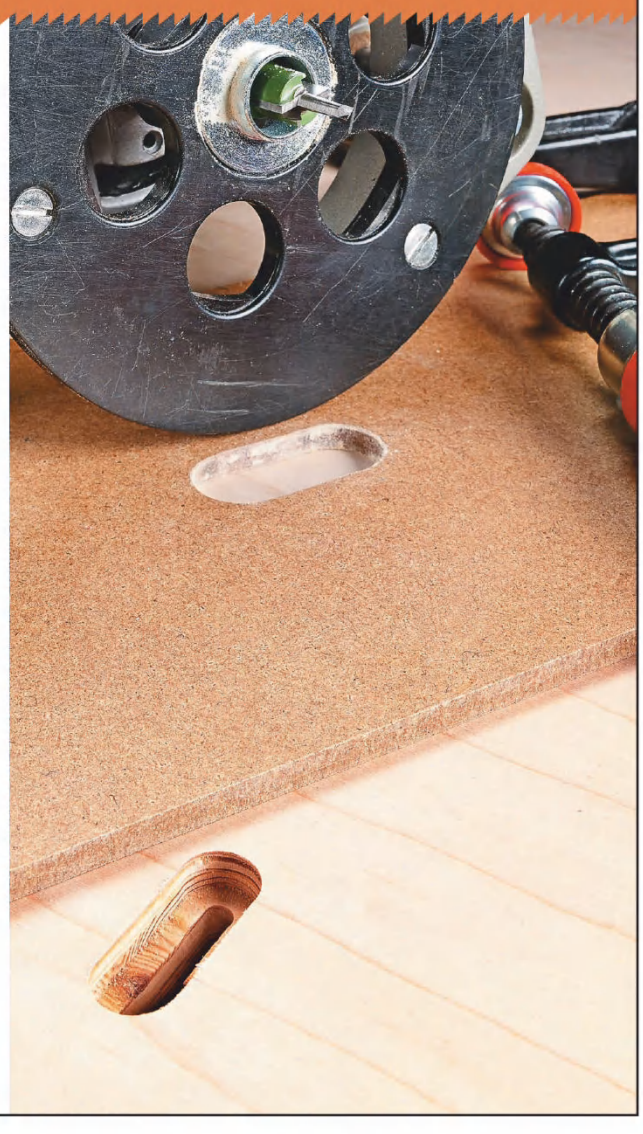

Illustrations: Bob Zimmerman

SLOT CUTTING BITS

The next unique bit that I have fallen in love with is a slot cutting bit. Now, I know. Slot cutting bits are not super unique. But, instead of having a slot cutter in each width that I need, I have grown fond of the slot cutting bits that act like a dado stack. The one I use, from *Infinity Cutting Tools*, is shown at right.

STACKABLE WIDTH. What I really appreciate about a slot cutter with a design like this is that it's convertable. With one bit, I can cover a variety of needs. The bit consists of an arbor that you can add or remove different cutters to. This means that you can dial in the cut width and even add small shims to fine-tune the fit. In addition, different size guide bearings allow you to set the depth of cut, depending on what the task at hand needs.

USES. One of my favorite uses for a slot cutting bit is when creating frame and panel parts. I find I can make more consistent parts than when I use my table saw. I also like to use the slot cutter for specialty slots, such as adding splines in the corners of miters. It's easier to guide the workpiece flat on the router table than to stand it on the table saw.

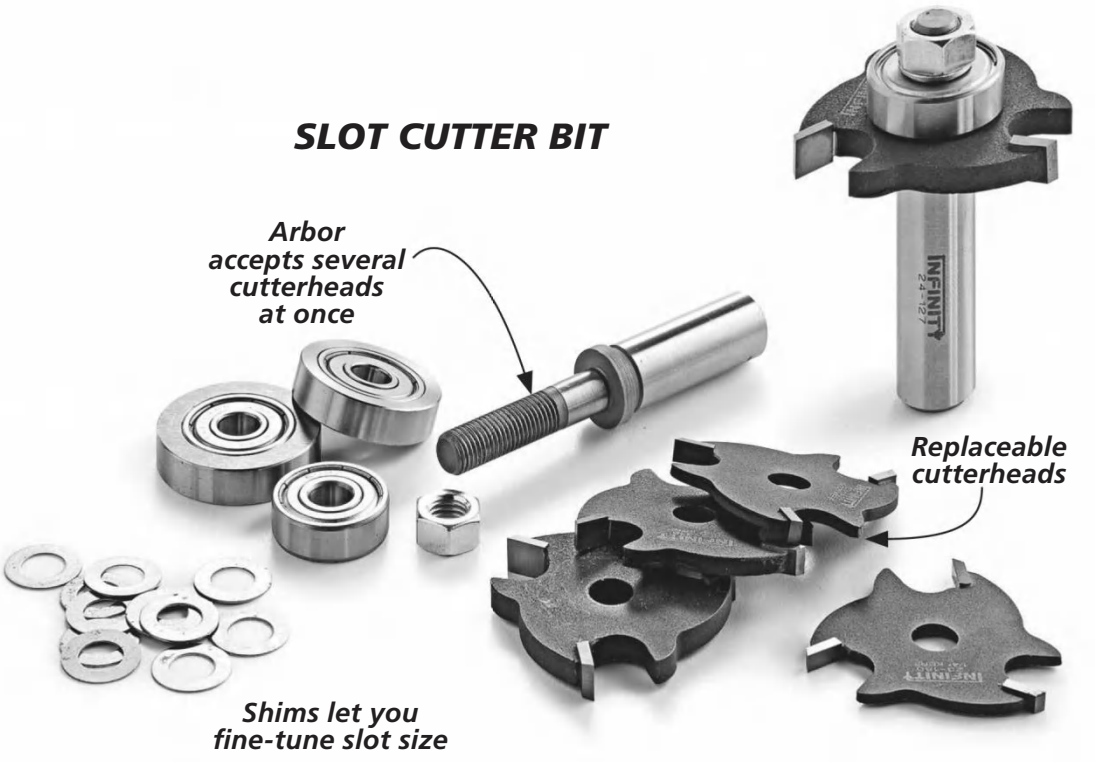

SMALL COMPRESSION BITS

In the last couple of years, I've fallen in love with my palm router. After I bought my *Bosch Colt*, it's my preferred router. I like the weight and size of it for most things. So, when I discovered compression flush trim bits that were designed for palm routers, I was on-board.

COMPRESSION PROFILE. The thing that makes the compression bits better (in my opinion) is the angle of the cutters. The opposite angles of the cutters cause the bit to cut clean on both sides of the workpiece. It bascialy becomes a spiral-downcut and up-cut bit in one. This leaves you with super clean edges on both sides of the workpiece. I also like that these bits come equipped with a bearing on the top and bottom of the bit. This means you can use it as either a flush trim or pattern bit.

SMALL SCALE. Most compression bits are designed with ½" shanks for full size routers. The ones you see below are designed with ¼" shanks for uses with smaller routers. They are available in a couple of different lengths and diameters as well.

IN USE. Using these bits are much like using normal flush trim or pattern bits, except that you do need to keep in mind the smaller shank size. For me, this means trimming the waste close

A compression bit, like this one from Infinity, combines the cutting actions of a spiral up-cut and a spiral down-cut bit in one. They leave a smooth surface on both faces of the workpiece.

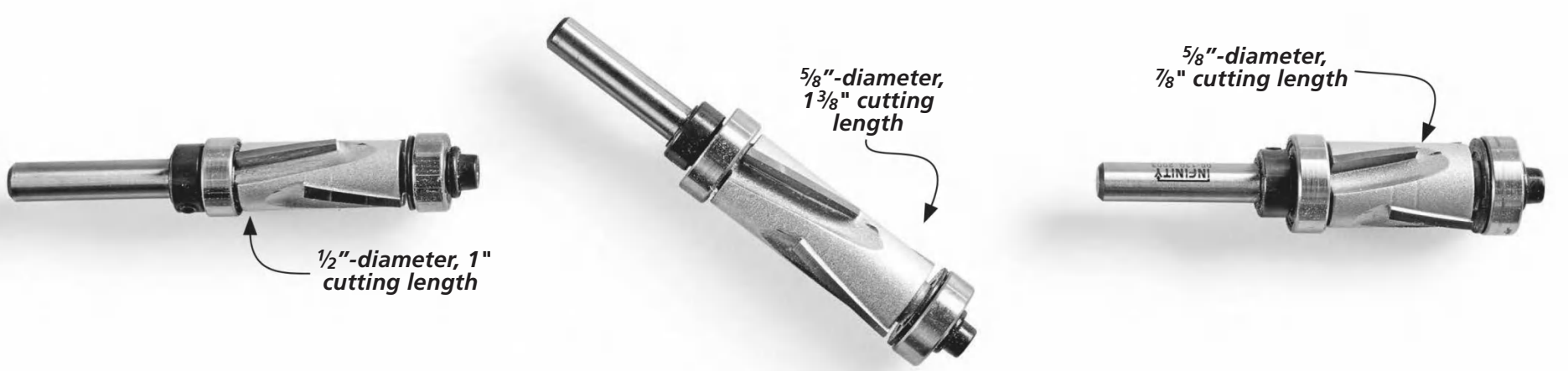

to my layout line and not hogging off a bunch of material.

One trick that I found with these is you can actually double the cutting depth by removing the lower bearing. For example, if you're flush trimming 2"-thick stock, make one pass with the top bearing following a template and the lower bearing removed. This will flush trim half of the workpiece. Then, reinstall the lower bearing and make a pass from the opposite face. The lower bearing will follow the already flush-trimmed surface and give you a smooth, trimmed workpiece.

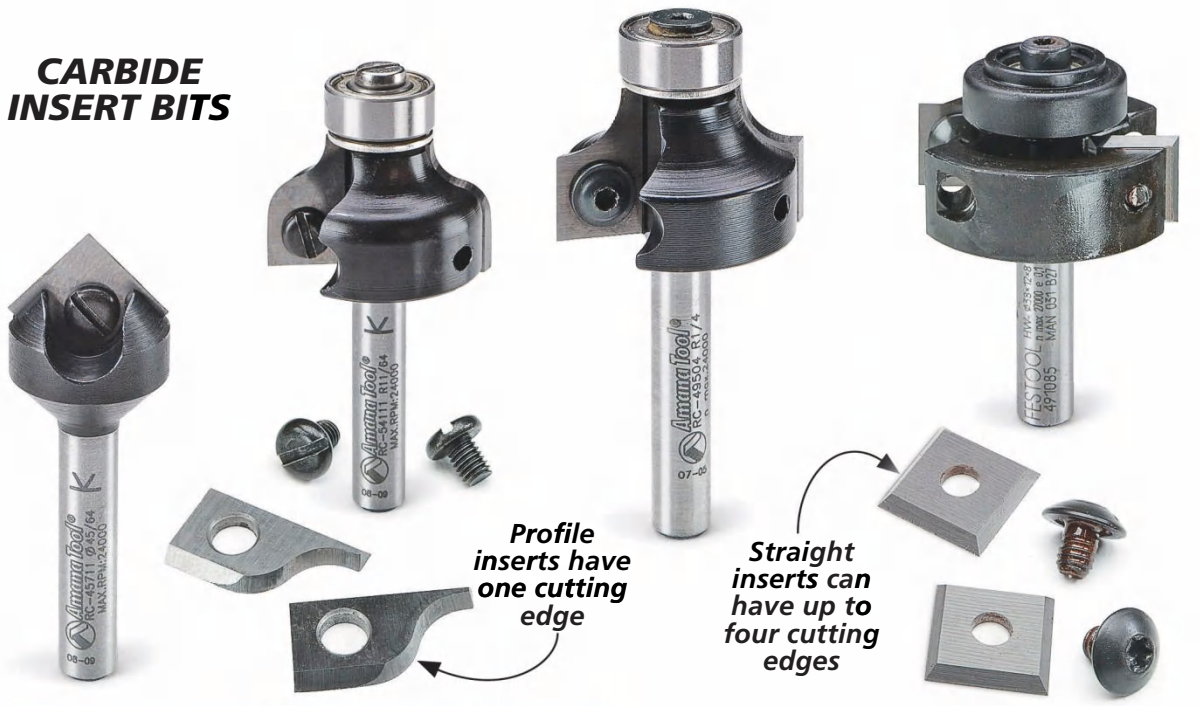

The In-Tech router bits from *Amana Tool* come in a variety of profiles. The most commonly used in my shop are roundover, ogee and rabbeting bits.

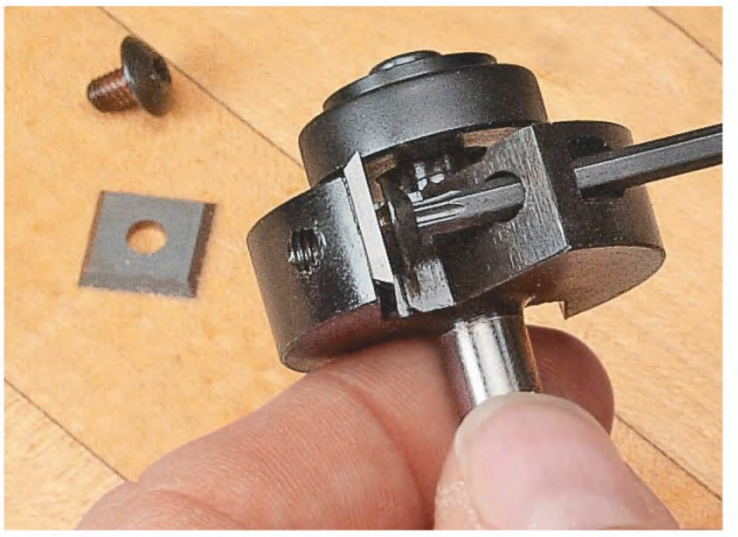

The carbide cutters can quickly and easily be replaced. On straight cutters, like this rabbet bit, they can be rotated to a fresh edge.

CARBIDE INSERT CUTTERS

I'll admit. These last router-bits are ones that took me a while to warm up to. But, after using them, they're pretty dang handy. And those are replacable carbide router bits.

BORROWED TECHNOLOGY. You may be familiar with carbide cutters in planers and jointers. And I have to believe that's where the router bit manufacturers got this idea from. But it's exactly like it sounds like — the carbide cutters in these router bits are replacable and some are able to be rotated (straight profiles like a rabbet or straight bit), just like you would on a jointer or planer.

COMMON PROFILES. As you can see in the photos above, these bits are available in some common profiles including straight, cove, core box, rabbeting, roundover and more. While you wont find every profile under the sun, you'll find most of the commonly used profiles, which is where these bits really shine — the ability to rotate a cutter and have a fresh cutting edge when you need it. There's nothing worse than tring to complete a job with a dull router bit. They do come with a drawback though. They tend to be a little more expensive than a standard bit would be. However, if it's a profile you use often, you're sure to gain that back by simply rotating or replacing a cutter instead of replacing the entire bit.

So, are these bits necessary to have in the shop? Absolutely not. But who's to say you can't have some small comforts in the shop. And honestly, they do make specific tasks a heck of a lot easier. The more and more I use my router, the more and more I appreciate unique, specialty bits like these. They not only give me better results, but also get me from point A to point B faster. W

STEVE WALL LUMBER CO.

Quality Hardwoods and Plywood For The Craftsmen and Educational Institutions

Alder	4/4	Select	3.30	$ 90.00
Ash	4/4	Select	2.60	$101.00
Basswood	4/4	Select	1.95	$ 91.00
Birch	4/4	Select	3.50	$115.00
Butternut	4/4	1C	3.25	$ 98.00
Cedar	4/4	1C+Btr.	2.00	$ 85.00
Cherry	4/4	Select	4.90	$129.00
Cypress	4/4	Select	2.75	$ 97.00
Hickory - Pecan	4/4	Select	3.00	$108.00
Mahogany (Genuine)	4/4	Select	5.10	$122.00
Maple (Hard)	4/4	Select	3.65	$116.00
Maple (Soft)	4/4	Select	2.60	$ 95.00
Oak (Red)	4/4	Select	2.80	$105.00
Oak (White)	4/4	QS	2.90	$105.00
Poplar	4/4	Select	1.80	$ 85.00
Walnut	4/4	Select	5.75	$125.00
White Pine (Soft)	4/4	F.G.	1.40	$ 78.00
Yellow Pine (Soft)	4/4	Clear	2.20	$ 90.00

Above prices are for 100' quantities of kiln dried rough lumber sold by the Bd. Ft. FOB Mayodan, NC. Call for quantity discounts. Other sizes and grades available.

SEE OUR CATALOG ON THE WEB!

UPS Specials
Above prices are 20 bd. ft. bundles of clear kiln dried lumber 3"-10" wide • 3'-5' long (Random widths & lengths) Surfaced 2 sides or rough. Delivered Ground prepaid in the Continental U.S.

OLIVER MACHINERY DEALER
HARDWOOD PLYWOOD
CUSTOM RAISED PANEL DOORS
CUSTOM PLANK HARDWOOD FLOORING
THIN CRAFTWOOD
EXOTIC LUMBER

STEVE H. WALL LUMBER CO.
BOX 287, MAYODAN, NC 27027
336-427-0637 • 1-800-633-4062 • FAX: 336-427-7588
Email: woodsales@walllumber.com
Website: www.wallumber.com

Send $1.00 For Lumber Catalog
Prices Subject to Change Without Notice

Woodworking Apps

While I typically head to the shop to get away from computer screens and technology, they do have a place in woodworking. I find that software applications ("apps") help make my time in the shop more efficient, saving time, money, and a lot of head-scratching.

After taking a look at dozens of apps (and believe me there's a ton of them out there), I've rounded up a few of the ones I use on my *Apple* iPhone on a regular basis. Many of these apps (or similar ones) are available for other platforms (like *Android*), as well. Downloading them to your phone (or, in many cases, a tablet) and you can be working with them in just a few minutes. Many of them are free or low-cost. In either case, they're worth a look.

BF PLANNER

A lot of things go into the planning, designing, and building of a project. But one of the first is determining what material to use to build your project. Besides the look a specific material provides, the overall cost plays into the decision-making process also.

To determine the cost, you'll need to know the board footage you'll need for each species. I'll be honest, calculating board footage isn't rocket science. But there are apps that will help simplify the process. The one at the top of my list is *BF Planner*.

BF Planner provides a basic interface to input the key dimensions, as you can see at the top of the next page. A few quick inputs and you'll know exactly how much material you'll need for a set of specific parts. But most projects have multiple parts. *BF Planner* solves that problem by providing a project-based option. With this feature, you can create a list of parts for the project and

Written by: Bryan Nelson

save it, like in the image shown at the far right.

While *BF Planner* doesn't add up all the separate parts calculations for you, having the list saved makes it easy to add to and update. Speaking of updating, that's the only real downside of *BF Planner* (besides the ads that appear at the bottom of the free version). You have to completely re-enter all the information if anything about the part changes. But I think that's a small "price" to pay.

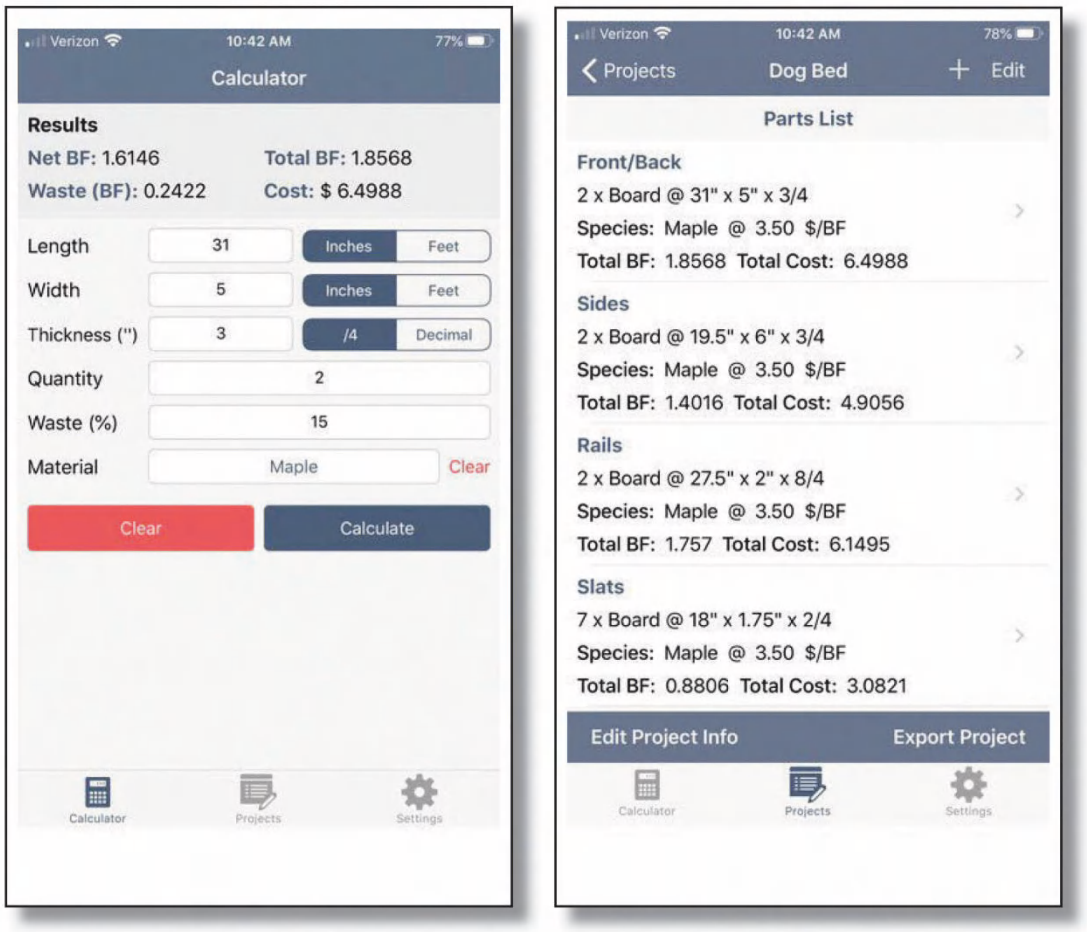

Calculating board footage is just a matter of entering the relevant numbers for a part in the calculator (left). You can also create a parts list for each project to determine the total board footage (right).

FRACTION PLUS

Every project I design and build involves adding and subtracting numbers (and occasionally multiplying them). The challenge is those numbers almost always involve fractions. With most calculators you need to convert to the decimal equivalent to take care of the process. Plain and simple, that's a pain.

FRACTION CALCULATORS. Enter fraction calculator apps. They take the pain out of the process by allowing you to enter the fractions as you see them. For me, *Fraction Plus* app provided the best answer of the bunch.

What I like about this app is the interface (shown at the left, below). Like any calculator, there's a basic numeric keyboard for entering whole numbers for your calculation. Then you directly enter the fraction using the two small keyboards to the right without having to worry about converting to decimals. The top keyboard is for the numerator and the bottom one is for the denominator.

Keep adding (or subtracting) and the result keeps updating at the top. Hit the "=" sign and the final result appears. You'll notice there's a circle with a check symbol next to it. Tap that and you'll be taken to the screen shown at the near left. It's a "check your work" screen and shows how you would do this by hand. It's a good way to make sure you didn't forget a number (or enter one twice). Again, it's a free app so you'll deal with ads at the top of the screen.

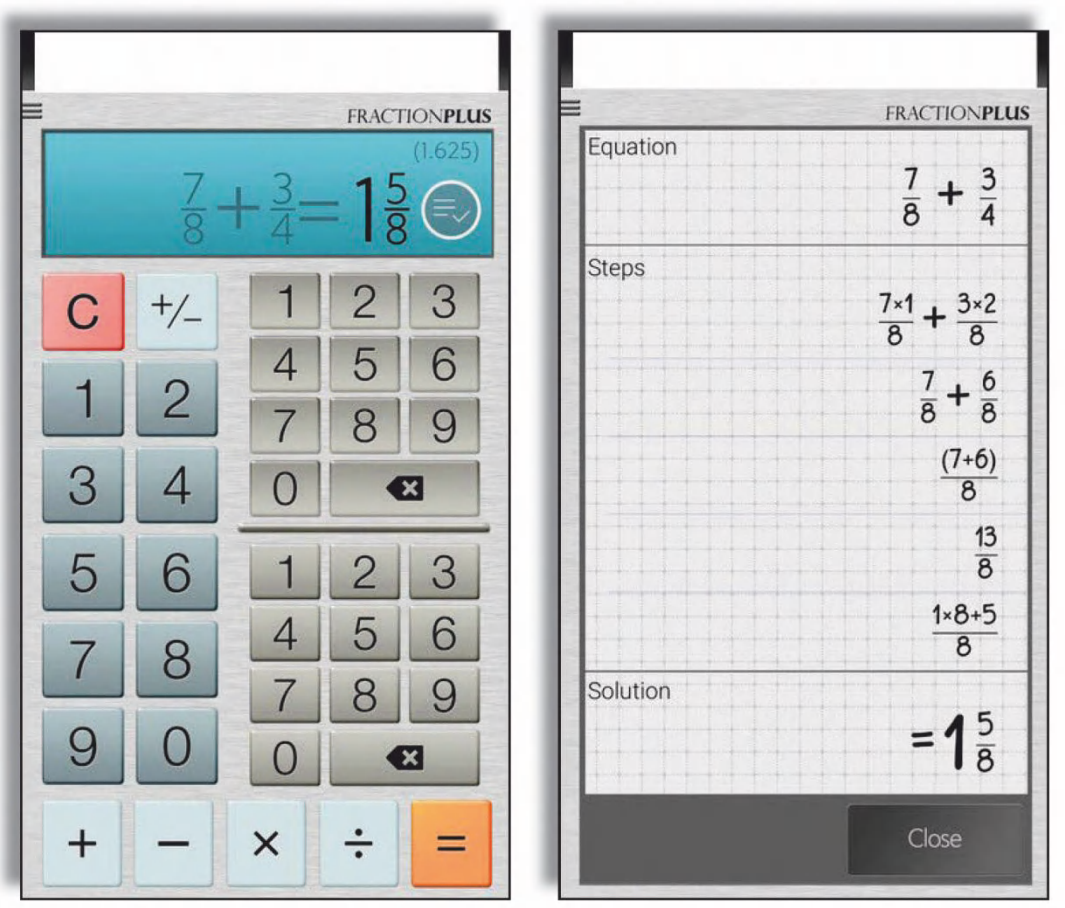

Fraction Plus looks like a basic calculator. A closer look reveals the separate numerator and denominator keyboards on the right. These keyboards make entering any type of fraction a simple process.

Illustrations: Bob Zimmerman

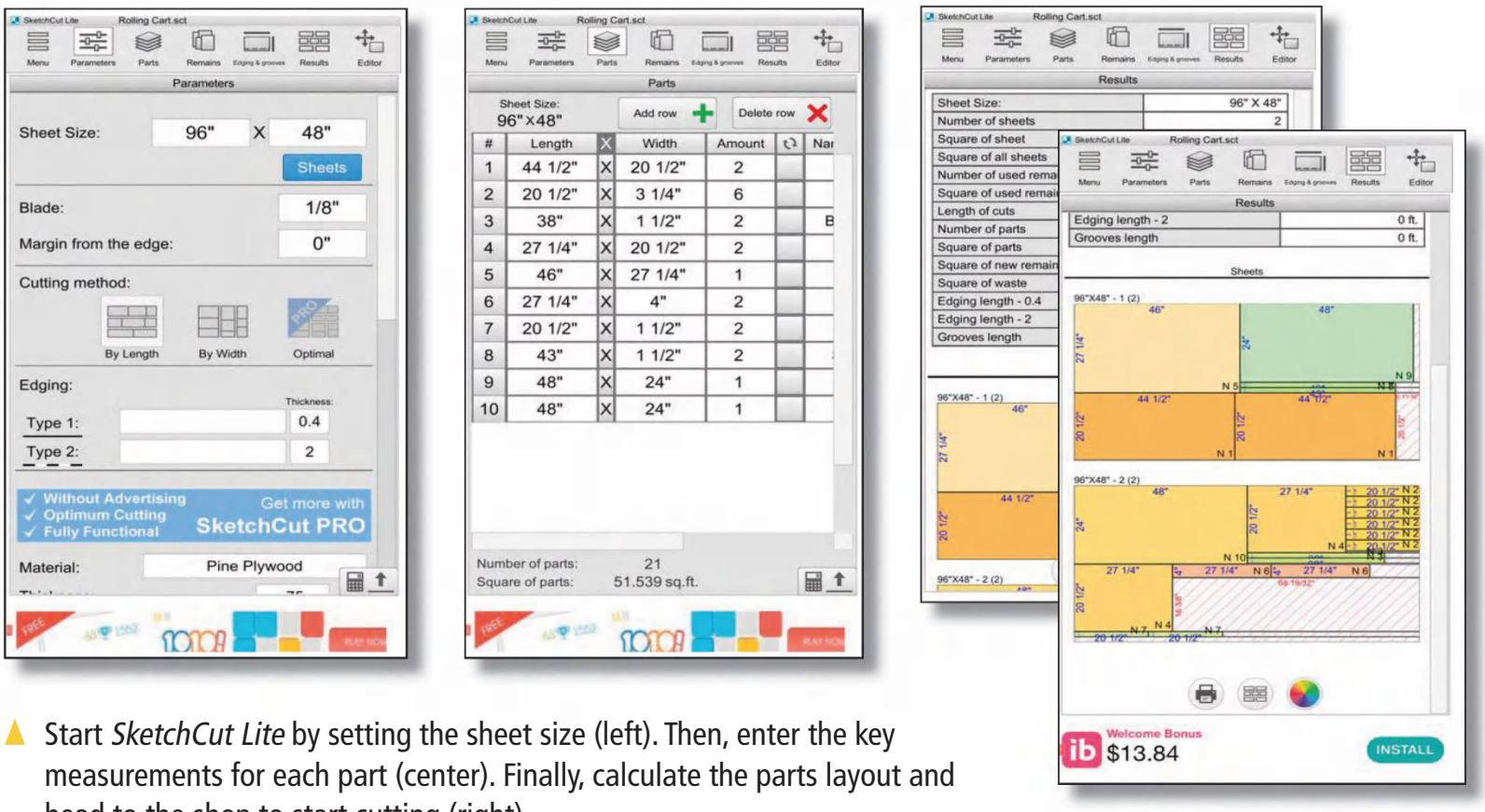

Start *SketchCut Lite* by setting the sheet size (left). Then, enter the key measurements for each part (center). Finally, calculate the parts layout and head to the shop to start cutting (right).

These next apps are real workhorses. They help make shop tasks easy, quick, and help expand your knowledge.

SKETCHCUT LITE

Any woodworker knows that getting the most out of sheet goods can be a real challenge, especially as the number of parts increases. To solve that problem in my shop, I use the free app called *SketchCut Lite*, shown above.

SHEET SIZE. You'll start with *SketchCut* by creating a new project file using the Main menu. The Parameters section allows you enter key details about the material, such as sheet size, thickness, the width of the blade you're using, etc.

Once you've taken care of that, plan to spend some time entering all your parts. You can see this screen at the center above.

RESULTS. Finally, you're at the key step — calculating the results. You can prioritize cuts along the width or the length (shown at the far right above).

Overall, the results looked pretty good. There is an option to upgrade to the "Pro" version to get optimal results, but in most cases what you get with the free version works pretty well. Finally, you can create a PDF file to print out and take to the shop for an on-site reference.

All in all, *SketchCut Lite* is a great app for making the most of valuable sheet goods in the shop.

THE WOODSHOP WIDGET

The next app on my list is *The Woodshop Widget* ($3.99), shown below. What I like about *The Woodshop Widget* is the ability to learn more about a wood species I'm considering for a project (far left image below). Then, I can compare a couple to see how they stack up against each other for things like hardness and shrinkage. The center image below shows this.

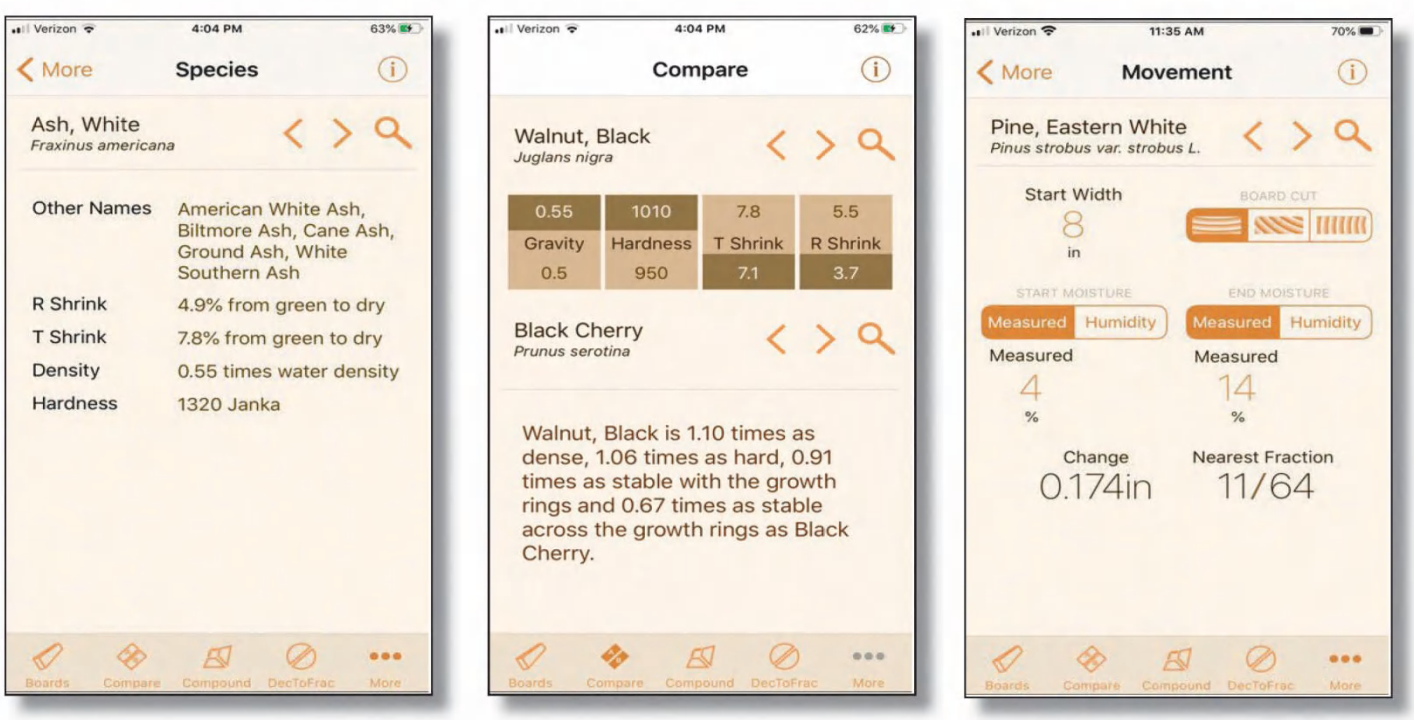

Learn about species (right), compare their characteristics (center), and calculate how the material will move (far right) to determine the best choice for your next project.

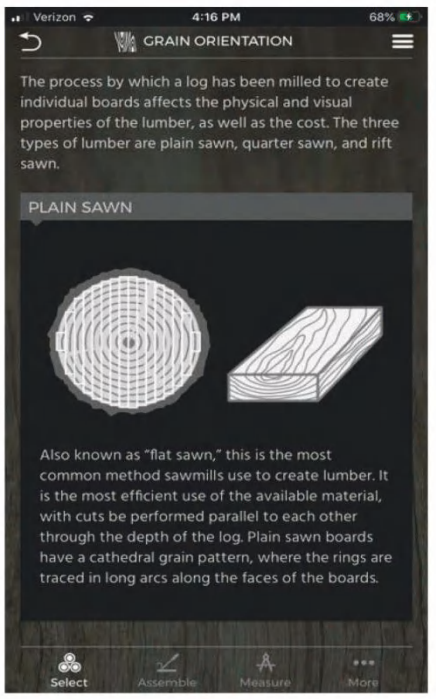

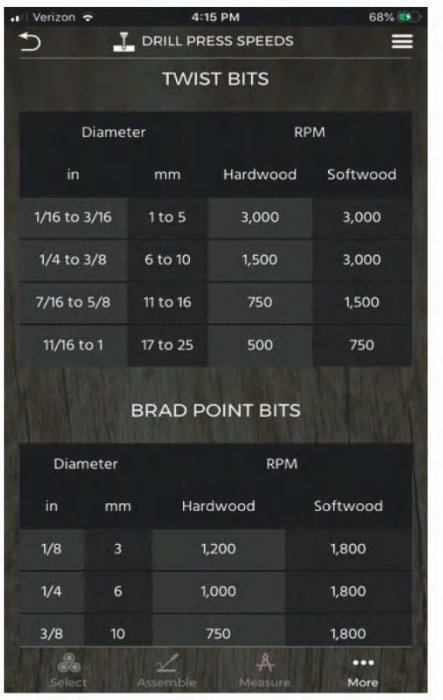

A lower menu provides easy access to topics such as grain orientation (left) and joinery (center). Inside the "More" option are conversion charts, tips and tricks, and a handy drill press speed chart (right).

One tool that's particularly useful is the movement calculator (far right, previous page). Knowing how much a part might change in width as the humidity varies allows you to plan for it as you design and build a project. Speaking of other tools, *The Woodshop Widget* also has a handy set of calculators for board footage, and those pesky compound angles.

WOOD CRAFTER

For just a dollar more, take a look at *Wood Crafter* ($4.99). It provides a wide range of reference material along with tools you'll find useful while you're working in the shop.

The main screen of *Wood Crafter* features four options -- Select, Assemble, Measure, and More. Choosing any one of these brings up additional options, some of which are shown above. You'll find a total of 18 "tools," basically two bits apiece, quite the deal for a handy shop helper.

FINAL DETAILS. While you can't go wrong with a free app, I find the *Wood Crafter* app the most appealing, its look and features are great. Combined with *SketchCut Lite,* I think I could handle just about anything my project could throw at me. W

ALL About

True Grit: Sandpaper

Silicon Carbide	Silicon carbide is one of the hardest sanding media and it fractures as it wears. This means it produces fresh cutting surfaces so it continues to cut well down to the paper. Often used in wet sanding applications.
Garnet	One of the oldest media, garnet works well on wood. However, the grains dull as they wear, which tends to lead to quick wearing sandpaper. Some argue that garnet leaves the best surface.
Aluminum Oxide	Probably the most common abrasive, used extensively in power and hand sanding applications. Works well for wood and softer metals. Grains fracture as they wear and produce sharp cutting
Zirconium	Heavy grit used on coarse belts and discs. It's the choice for heavy stock removal, but often comes with a higher pricetag. On the flip side, it lasts longer than aluminum oxide.
Ceramic	The addition of ceramic particles to aluminum oxide produces a long-lasting grit that works well on hardwoods and hard metals. It may leave too deep of scratches on softwoods.

Note: Color does not indicate grit type. Refer to manufacturers material for grit identification.

Written by: Logan Wittmer

The old adage that you get what you pay for holds true of many things in the shop. And that statement may be the most accurate when it comes to sandpaper. This shop must-have is easy to overlook. Because, let's face it. Nobody in their right mind enjoys sanding. But, with a quality sandpaper, and the right type for the job, sanding can be a little more bearable.

Here, I'd like to take a look at what makes a quality sandpaper. Then, I'd like to show you the types of sandpaper that I always have on hand in my shop.

▲ In my shop, these are a handful of the different sanding media I keep on hand.

THE MEDIA

When it comes to sandpaper, the media (grit) is where the rubber meets the road so to speak. So, I figure that is a good place to start examining sandpaper.

You may not give a lot of thought into the grit composition when picking out sandpaper, but you should. Different types of media have different properties. Some of them fracture quickly and provide fresh, sharp cutting action throughout the life of the sandpaper. Others, don't break down but instead turn "dull."

TYPES OF MEDIA. The chart to the left shows the most common types of sanding media and outlines some of their properties. The most common that you'll find for woodworking is aluminum oxide. It works well for both hand and power sanding.

Silicon carbide is another common abrasive. It's often used on paper that's labeled "wet-dry". The quick-fracturing grit works well for high-grit sandpaper and final hand sanding.

BACKING MATERIAL

The next important decision in choosing sandpaper is choosing the backing that your media is bonded to. Sandpaper isn't just paper-backed anymore.

PAPER. Paper-backed is the most common type of sandpaper. Paper backing is available in different weights. Weights A-C are lightweight and ideal for hand sanding. Paper weight D-G are heavier and made for machine sanding. The benefits of paper backing include being the most economical to produce and it is the lowest friction, reducing heat buildup.

CLOTH & FILM. One step up from paper backing is cloth and film. Both of these backings will come in a variety of weights, much like paper. (This is also where I would group some of the mesh sandpapers.) The benefits of cloth and film include being more flexible, they're tougher for machine sanding applications, and they can also be used wet.

FOAM. Finally, one of my favorite backers for hand sanding — foam. Generally, foam is only for hand sanding (there are some exceptions). It's the most flexible backer and can be used wet or dry.

GLUE & COATING

The last key to choosing sandpaper is selecting the coating on the paper and choosing a paper that has a quality glue holding it together.

COATING. The amount of coating on sandpaper is referred to as either open, semi-open, or closed. And that refers to the amount of the surface of the paper that is covered with grit. Open paper is about half covered with grit. Semi-open is about 75% covered. And closed paper is about 95% covered. The more open the paper, the less likely the paper is to clog up with sawdust.

GLUE. The adhesive that holds the media to the paper isn't something that's talked about often, but it certainly plays a role in how a piece of paper performs. A low quality (or old adhesive) will crack and the grit may even peel off the backing material. So, make sure your paper isn't old and crusty. The best quality papers use a resin adhesive on their papers.

Now that we've talked about what to look for when purchasing sandpaper, I want to talk about what types of sanding supplies I always keep on hand in my shop. I'm not super brand-specific with most things, but I've found that my favorite brand sandpaper is *Mirka*. It's a brand our local woodworking supply store carries it and its quickly become my favorite. It's a little bit more expensive than other papers, but I find it saves me time in the long run while sanding.

▲ For hand sanding, I like a foam sanding pad that helps even out sanding pressure. The *Goldflex* is more flexible and cuts fast. The denser *Norton SoftTouch* pad is stiffer and allows you to match the radius of curved parts.

POWER SANDING

In my shop, I love hand tools. But, when it comes to sanding, nothing beats my random orbit sander. I like to have sanding discs in 120, 150, and 220-grit. I probably have some 320 and 400 grit floating around my shop as well, but I generally keep that high of grit for hand-sanding (more on that in a bit).

GOLD & IRIDIUM. The two sanding discs that I use can be seen below. The *Mirka Gold* and *Iridium* are my choice. Both are aluminum oxide with an open coating, but the *Iridum* has some ceramic content so it lasts a little longer. I've also found the ceramic makes it cut a little more aggressively. If dust collection is your priority while sanding, the *Abradnet* (also shown below) works very well. Personally, I make sure I keep a stash of *Iriduim* in my shop.

HAND SANDING

After I'm done with my ROS, I usually go to a hand-sanding for a ultra-smooth finish. This can be done with sheets of paper, but recently my favorite has been foam-backed sanding pads, as they are easier to conform to detail (photo above).

GOLDFLEX PADS. The pads that I keep on hand are the *Goldflex* pads in 240 and 320 grid. I also have some *Norton SoftTouch* pads floating around my shop and they work well also. The *Norton* foam is a little denser than the *Goldflex*.

For sanding larger, flat areas I like to use a sanding block. The rubber blocks I use have teeth meant to grip the edges if sheets of paper. Using sheets with the teeth is a pain in the keister if you ask me. Instead, I like to load them up with my next must-have sandpaper — PSA paper.

PSA ROLLS

It's a joke I've heard time and time again. *Woodsmith* single handily carries the PSA (sticky-backed) sandpaper market. And, it might be true, we use it a lot! But after buying a couple of rolls for myself, sticky back sandpaper has become one of my most used sanding items. And it's not just for sanding.

SANDING, SURE. Sure, PSA paper is great for sanding. I stick it on hardwood sanding blocks and my rubber blocks and it works great. (I use *Mirka Base-cut* in 4.5x30′ rolls because of local availability, but the other PSA rolls work just as well.)

OTHER USES. The beauty of the PSA rolls however,are the other uses. I keep a strip stuck to my

► For power sanding, I prefer to use the ceramic-mixture *Iridium* pad, because I find it lasts longer than other styles.

outfeed table to place my sharpening stones on and keep them from sliding. In addition, anywhere you need extra grip (like a miter gauge fence, shown at right), is the perfect spot for it. The uses are countless.

SPECIALTY PAPER

Finally, I keep a collection of specialty paper on hand for certain tasks. Most specifically, I keep a handful of high-grit papers around for sanding finishes. *Microstar* 800 and 1000 grit covers almost all of my needs. It's a film-backed media that is aluminum oxide, and it can be used wet or dry. I suggest getting discs so that you can hand or power sand with them. You can see these below.

The next time you're in your shop, take a look at the back of the sandpaper that you have on hand. You'll see some markings on there designating some of the things I talked about, like the grit type and the backing weight. And while you're looking also ask yourself if you're happy with the way that your current sandpaper works. If you are — great! But, if you think you could upgrade your sanding time just a little bit, do yourself a favor and go out and select some quality sandpaper using the insight you gained here. W

▲ Adhesive-backed sandpaper works well on items like miter gauge fences where you need a little extra grip.

◄ Ultra-high grit sandpaper isn't something you need everyday. But when you have a finish that needs sanding, you'll be thankful that you have some on hand.

Written by: Phil Huber; Project Design by: Dillon Baker

The shaped brass handle on top serves as an easy way to transport the lantern. You can also use it to hang the lantern from a wall-mounted bracket.

The lantern works just well inside as out. Whether you use a candle or an LED candle, you'll get the same ambiance. Feel free to make the lantern from whatever material you want.

Candle Lantern

Set the right mood indoors or out with this project that you can build in a weekend.

Even though lighting technology has moved way beyond candles, the gentle flicker still draws people in. In an instant, you've created a welcoming, comforting environment. Housing the candle in a lantern only heightens the experience and calls back to an earlier time.

This lantern project has everything a weekend project should have. Great design comes first. Many "simple" projects fall flat on their faces because the designer didn't take the time to make the project beautiful. In addition, this lantern keeps the ease of construction while incorporating enough thoughtful details you expect in a custom piece.

Speaking of details, let's take a quick survey of a few. The tapered profile and overhanging top evoke Arts & Crafts styling. The seamless miters show off the shape and allow the individual pieces to flow together.

All straight lines can feel harsh. So Dillon Baker, the project designer, incorporated curves in the bottom, windows, and the opening in the top to balance the straight lines.

From a building point of view, simple can be challenging, too. In this project, you'll learn how to use a template to not only form the shapes but to create the miter joints, as well. The brass handle at the top is even a custom-made piece. What you'll discover is that in a short time, you can build a few of these lanterns. Some for inside, others for the deck, and a few to give as gifts. A great way to spend a weekend.

Illustrator: Becky Kralicek

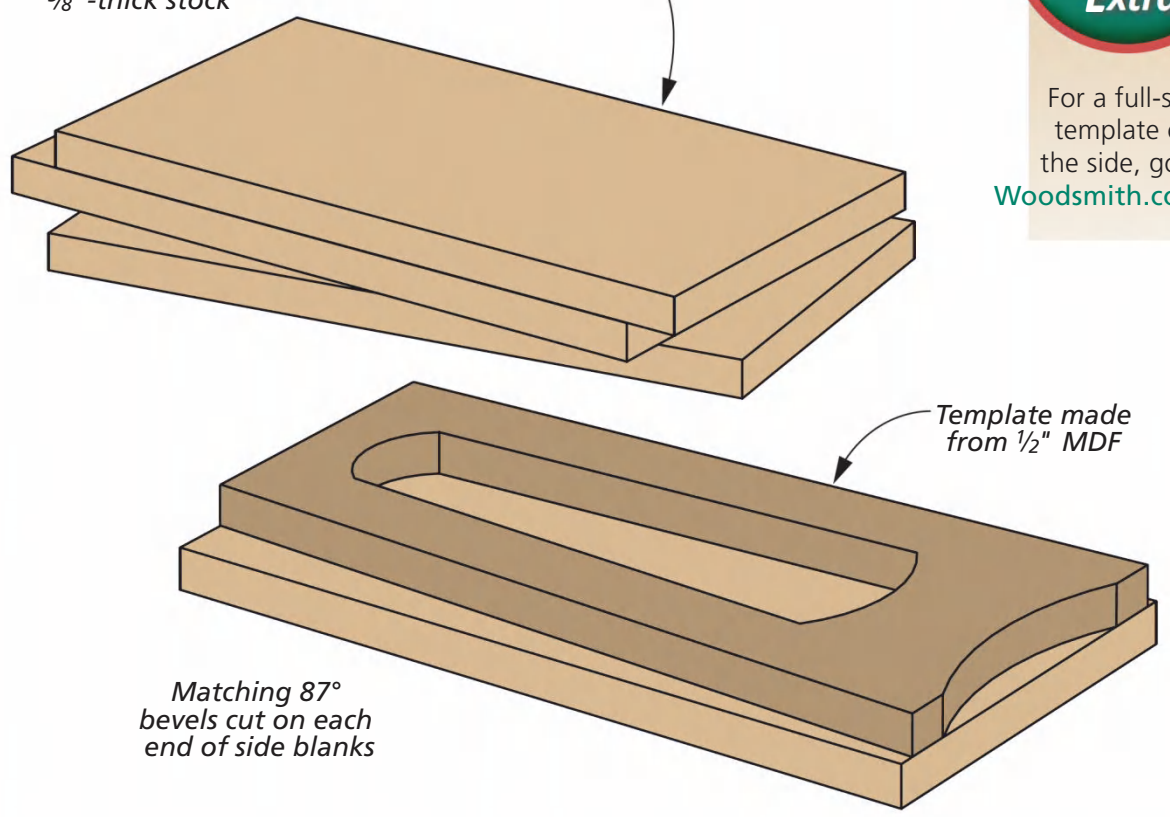

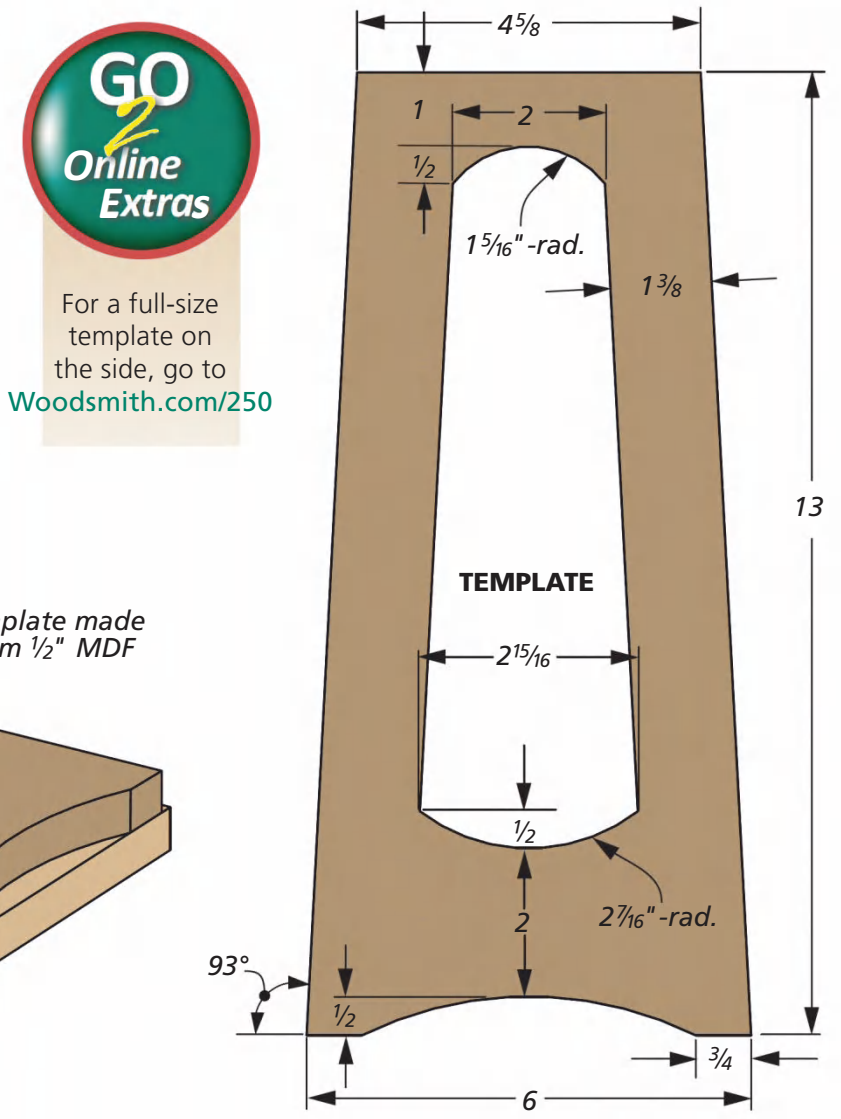

GO 2 Online Extras

For a full-size template on the side, go to Woodsmith.com/250

Sides shaped with a TEMPLATE

Two assemblies make up the lantern. Four sides and a bottom form one assembly. The other is the top. Everything is made from solid wood pieces.

PREPARE THE BLANKS. Get things started by cutting four blanks for the sides to the size shown in the drawing above. A couple of things deserve notice. The top and bottom ends are beveled 3°. These two cuts need to be parallel to each other.

Keep the blade tilted but install a dado blade. Then cut a dado on the inside face of each piece that will hold the bottom panel (detail 'b' on the next page).

MAKE A TEMPLATE. Before going any further, take a few minutes to make a template that matches the final shape of the sides. ½" MDF is ideal for this application since it's easy to form and is perfectly flat and smooth. Use the drawing to guide you. Take care to create smooth, straight

ROUTER TABLE WORK

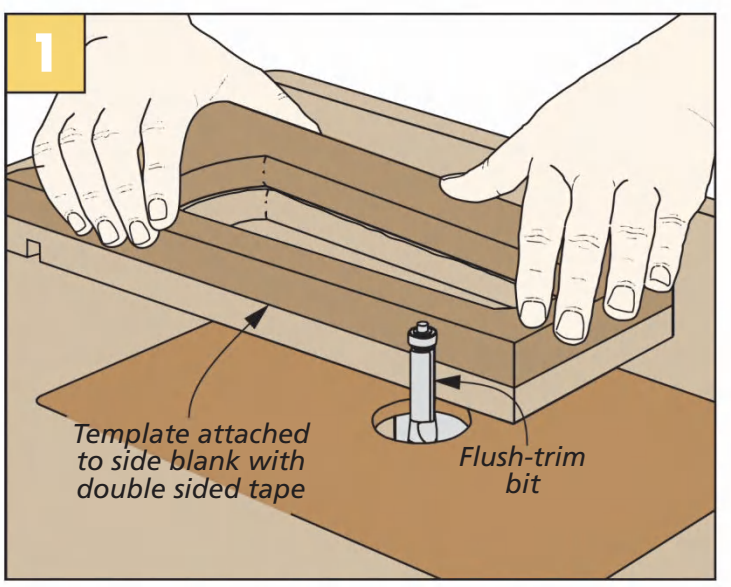

Flush Trim Three Sides. Trim the angled sides, the curve along the bottom, and the window to match the shape of the template.

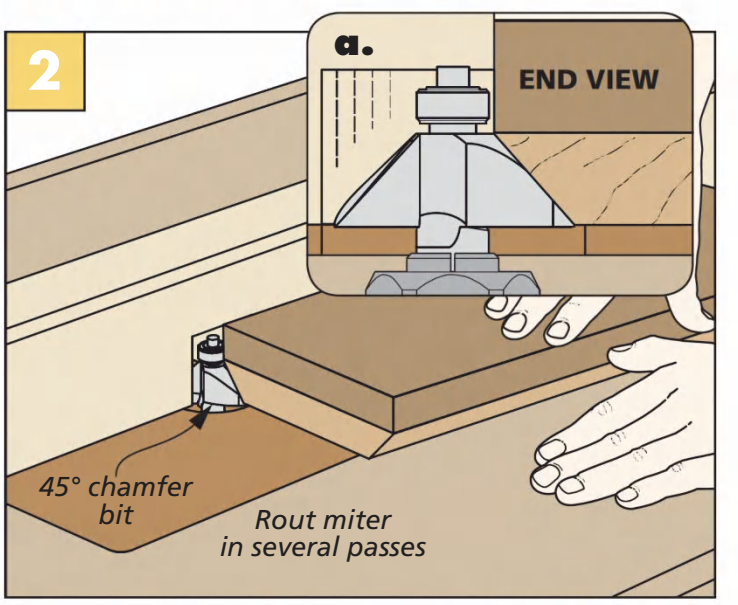

Miters With A Chamfer Bit. Leave the template in place and switch to a large chamfer bit in order to form miters on the sides.

lines and even curves since these will be replicated in each of the pieces.

TRACE, CUT, & TRIM. In order to go from template to side, you follow three steps. First, trace the profile of template onto the side.

Second, remove as much of the waste as possible. The long tapered edges (and the curve at the bottom) can be cut at the band saw. For the window, drill starter holes and cut out most of the waste with a jigsaw or scroll saw. Keep close but a little shy of the lines. This makes the final cleanup step easier.

That step is to trim the blanks at the router table, as shown in Figure 1 on the previous page. A small amount of waste produces smooth cuts.

MITERS MADE EASY. The sides are joined with miters. Typically these are cut at the table saw. But the tapered sides, makes that challenging. Instead, I used a technique that I often turn to when making small boxes.

That's to use a chamfer bit in the router table. You can see this in Figure 2 on the previous page. Since you remove a lot of material, make this cut in several passes, raising the bit between each pass. For the final pass, the bearing on the bit follows the template and trims the side without cutting into the template.

KERF FOR SPLINES. Long grain miter joints in solid wood are actually pretty strong — they're just difficult to glue and clamp. So figure 1 below shows how to cut a groove in the mitered edge to hold a spline.

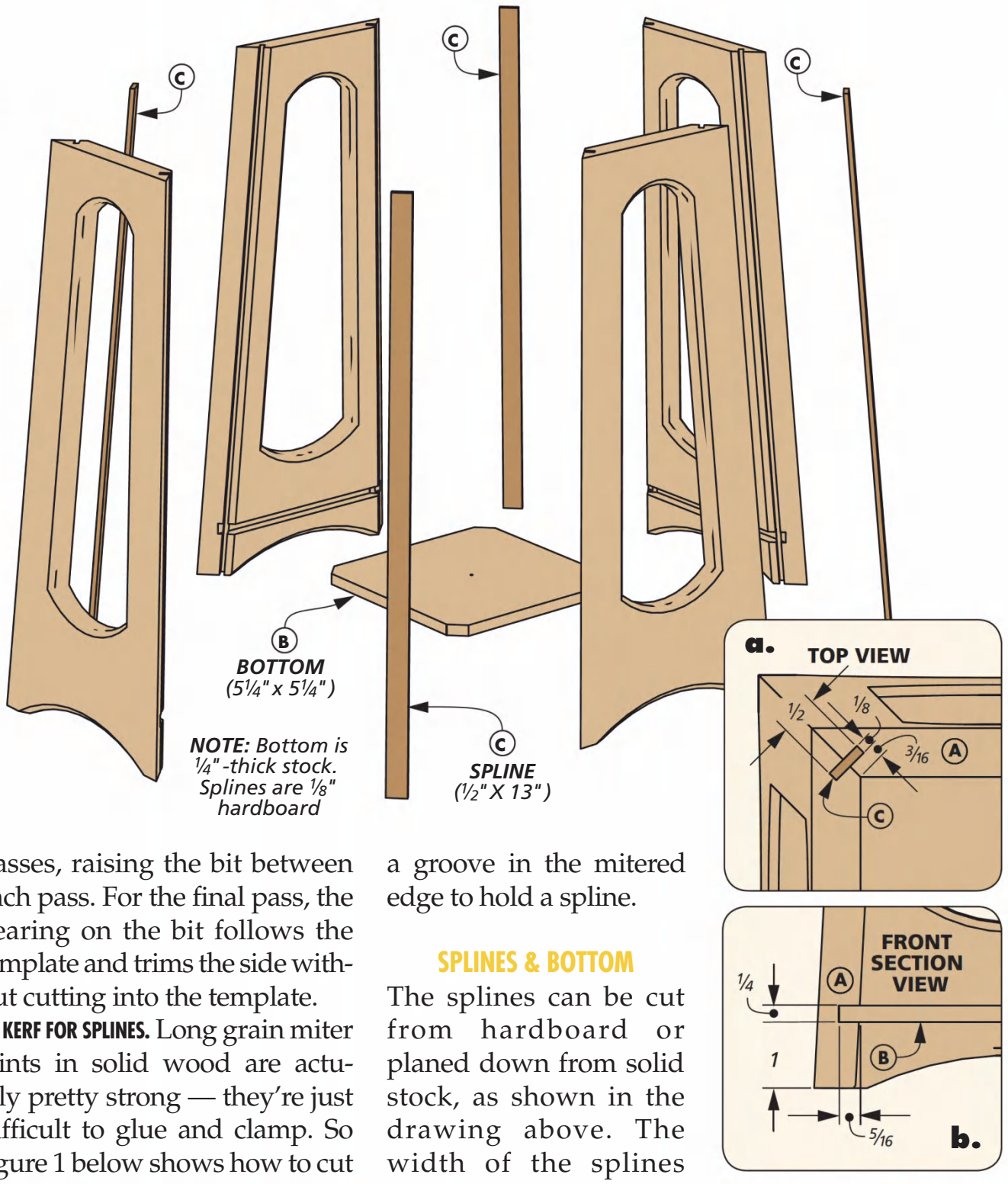

SPLINES & BOTTOM

The splines can be cut from hardboard or planed down from solid stock, as shown in the drawing above. The width of the splines should be a hair narrower than the combined depths of the grooves. This allows the joints to close up tight.

Use the splines to fit the sides together (without glue) and measure for the bottom. This can be cut to size. It isn't necessary to bevel the edges here. I did knock down the corners to keep them from binding during assembly.

GLUEUP. With angled sides, bar clamps won't do much good for the assembly. I arranged the sides outside face up and applied strips of masking tape across the joint lines. Flip this over, apply glue and the splines and roll up the sides around the bottom. Tape the final seam and set it upright on a flat surface while the glue dries.

MITERED SPLINES

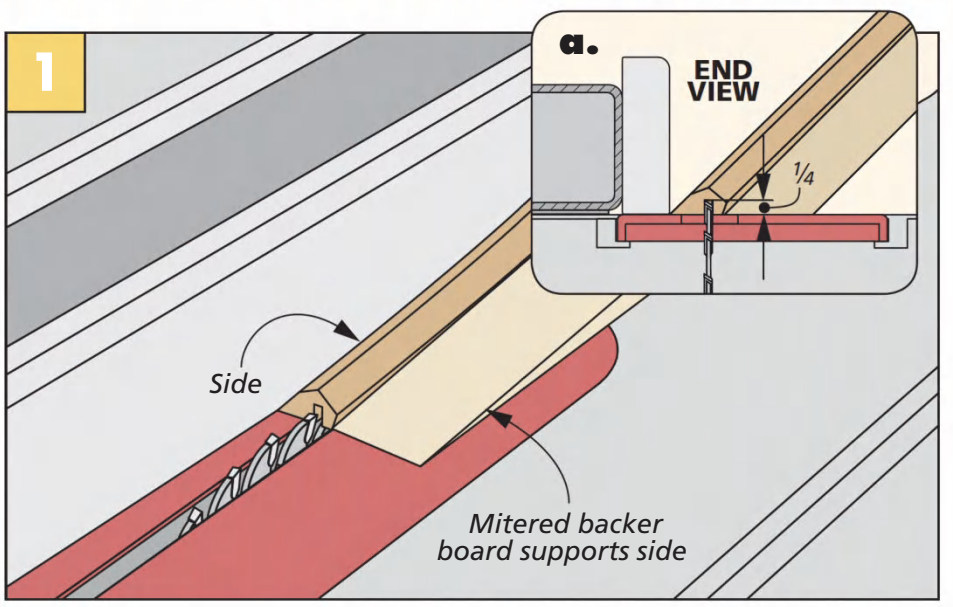

Cut a Spline Kerf. A wide support piece helps you hold the side at the correct angle while cutting a kerf along the miter on each angled edge of the sides at the table saw.

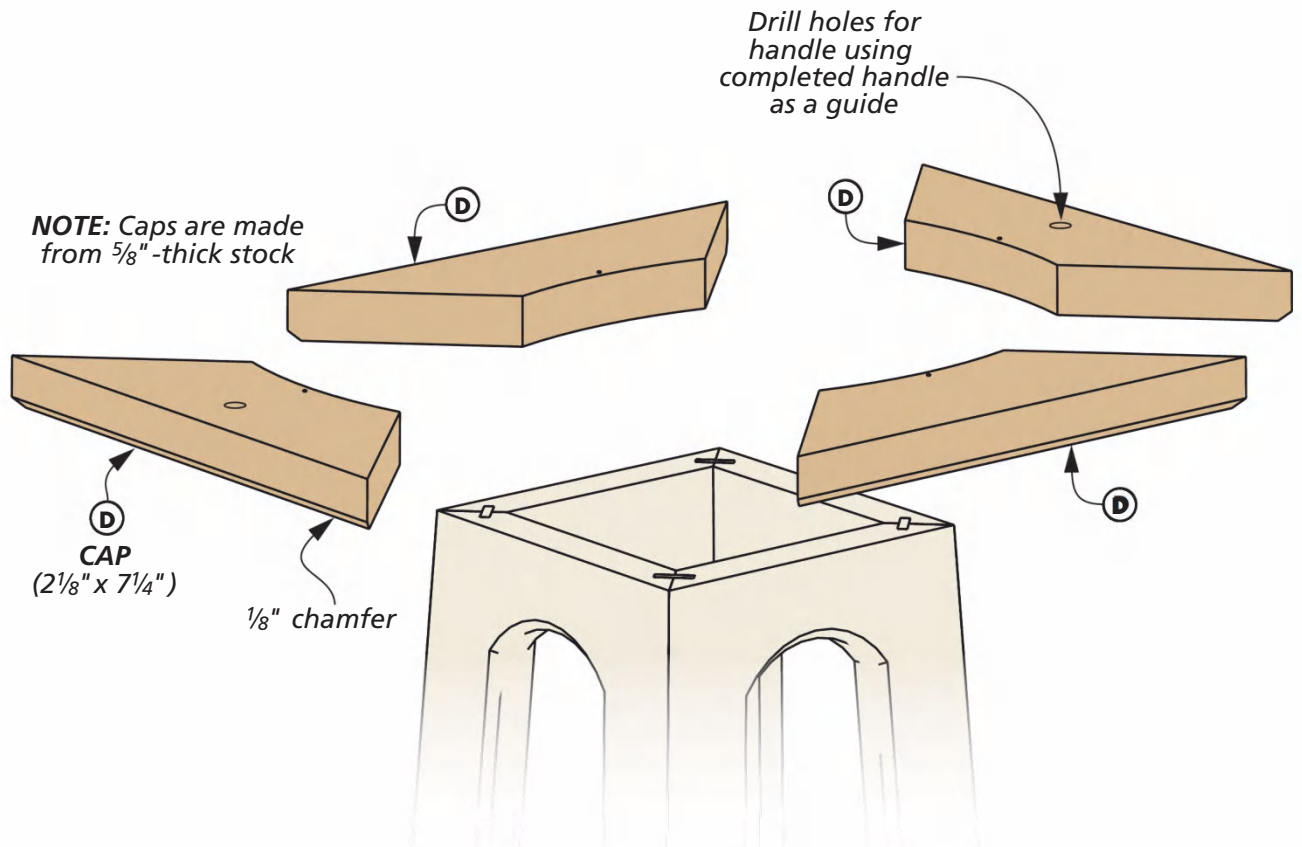

Top Assembly & HANDLE

It seems like this project just got underway. But here we are nearing the finish line already. All the attention now turns to the top of the lantern. Up first though, is to take care of a little post-assembly clean up. In an ideal world, the top and bottom of the lantern would be perfectly flat. I don't live there. So I needed to sand the surfaces level. A few strips of sandpaper applied to the top of a workbench or saw table creates a reference surface to level any uneven joints.

TOP ASSEMBLY. The miters and curves in the sides find a place in the top, as shown in the drawing. Cut the four caps to identical length, mitering the ends like a picture frame.

A curve on the inside edge of all the pieces does more than continue the design cues. It also opens the top a bit to allow a candle to drop in easier by removing the handle, which is attached with binding barrels.

Gentle curves can be formed simply. With layout lines drawn, a spokeshave works well or even a rasp and file. Figure 1 below shows how to make the curve with a large sanding drum (or spindle sander).

ASSEMBLY. Since we're dealing with miters again, the top is glued up the same way, with tape serving as clamps. After adding a chamfer and final sanding, this assembly can be glued to the sides. There's a lot of end grain here. So I drove in some long brads to reinforce

SHAPING CURVES & FINISH OPTIONS

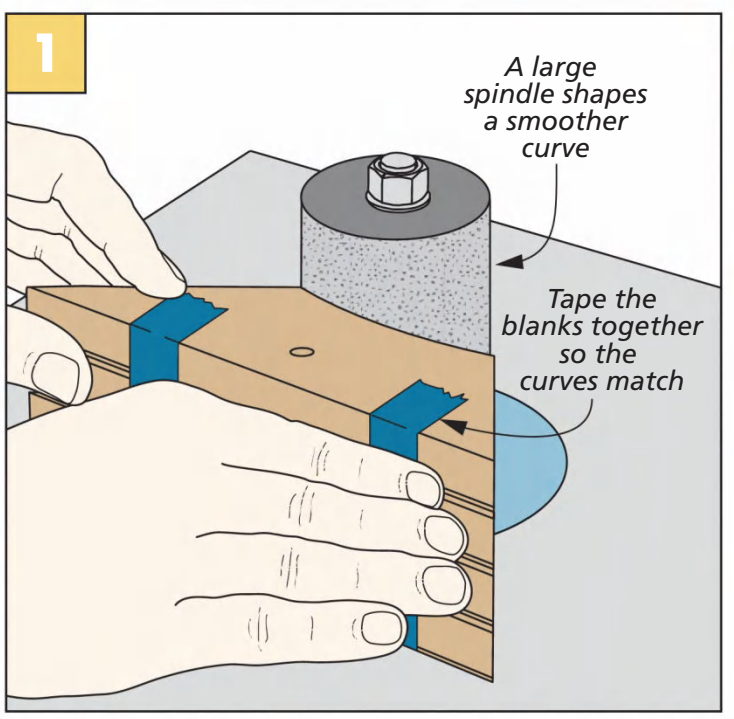

Sand the Curve. With smooth, even strokes shape the curve on the inside edge of each cap piece. An 80-grit drum avoids burning and clogging.

If the lantern will be used outside, choose a finish that can stand the elements and be easily renewed. Outdoor oils enhance the look of the wood and grain. Weatherizing treatments bring out an appealing silver hue.

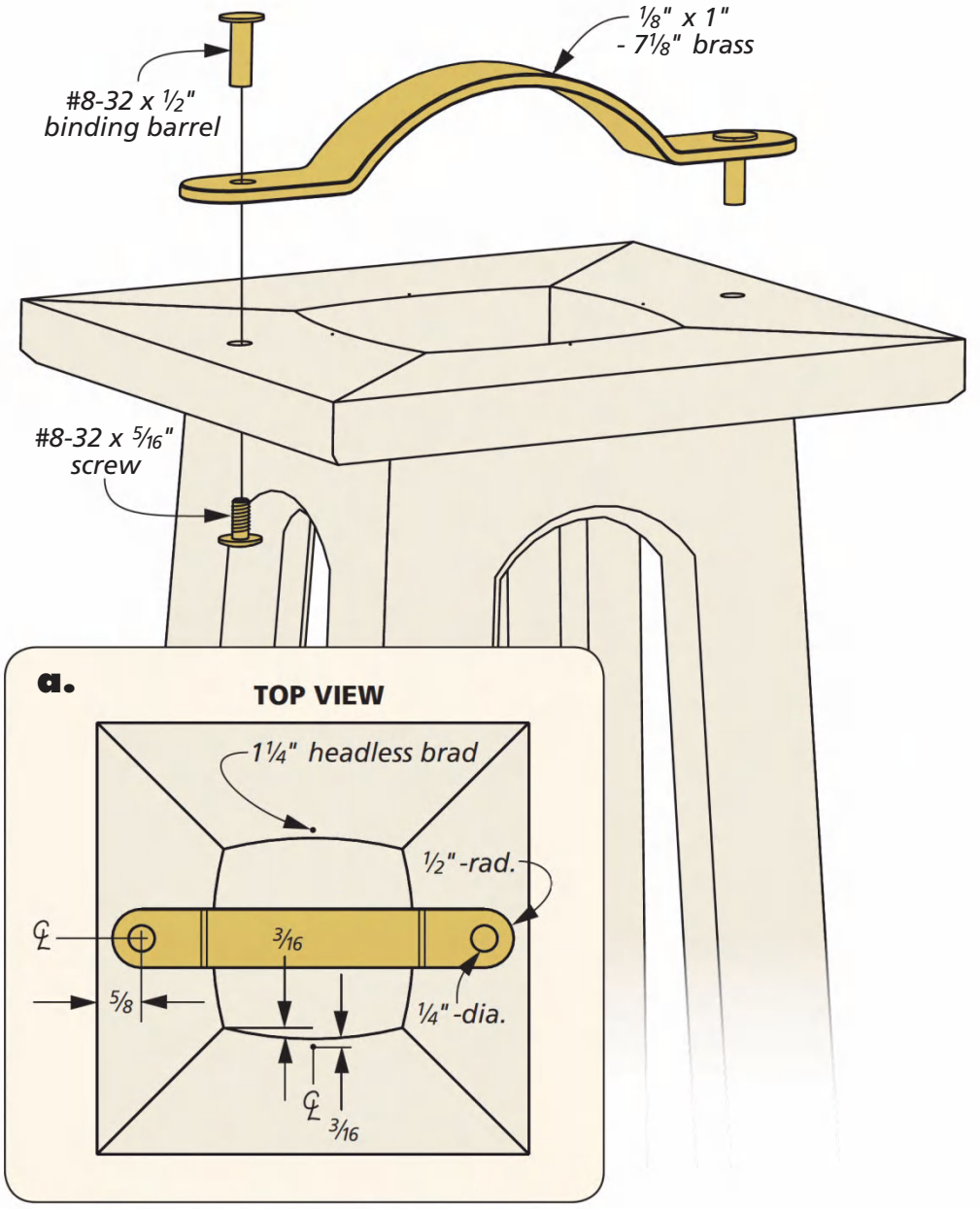

the glue joint. For something a little more invisible, a dowel in each side offers a great option. I placed a weight on top of the cap to clamp it in place.

FINISH LINE. With the three versions shown in the photo on the previous page, we could try out different finishes, as well as materials. The redwood and one of the cypress lanterns were finished with Penofin's *Brazilian Rosewood* outdoor oil.

The other cypress lantern had a weatherizing treatment applied. Rather than a stain, this is a chemical process that oxidizes the wood simulating (but speeding up) natural aging. The result is a silvery gray tone. you could apply a clear outdoor oil over it, or let nature continue.

BRASS HANDLE

The final piece to add is a handle for transporting the lantern (or to hang from a hook). I chose brass because it won't stain the wood like steel would and it weathers and ages beautifully.

Shaping brass goes well, too. After cutting it to length, round the ends with a file. The box at right shows how to make a two-part bending form out of hardwood. When shaping the curves, you need to remember to take the thickness of the brass into account.

Fit the handle between the form halves and squeeze them together in a vise (Figure 1). Then the handle is ready for mounting holes, as shown in Figure 2. Use the handle as a guide to drill matching holes in the top.

Complete your efforts by attaching the handle with two-part binding barrels and screws. These allow you to remove one side to access the candle. All that remains is to insert a candle, light it, and see who comes around to enjoy a pleasant evening. W

SHOP-MADE BRASS HANDLE

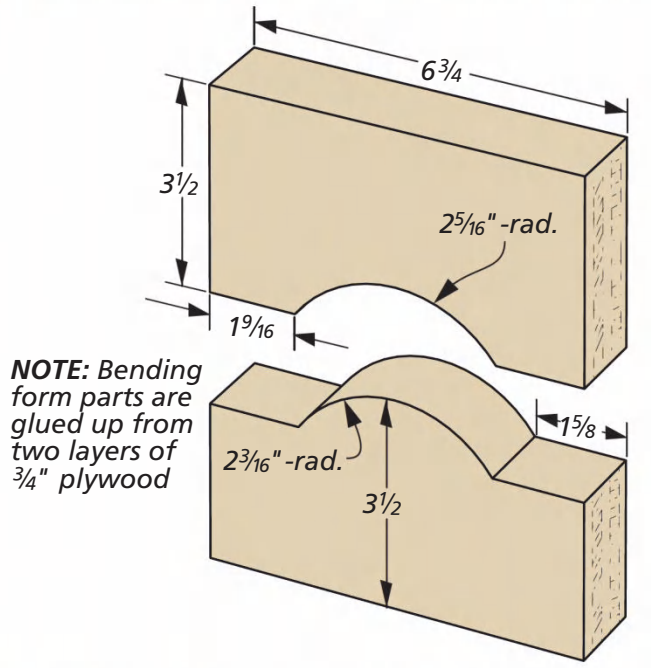

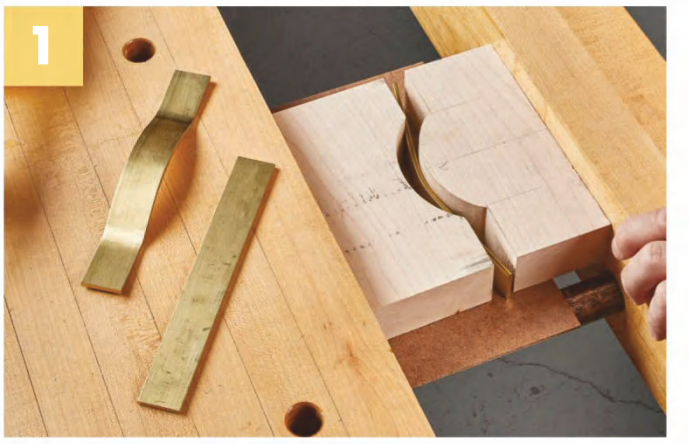

Maximum Pressure. A bench vise or machinist vise applies even pressure to form the handle into the curved shape.

Drill Holes. Use a fence to safely hold the brass handle while drilling a hole at each end and prevent it from climbing the bit.

Materials & Supplies

A	Sides (4)	5/8 x 6 1/2 rgh. - 13
B	Bottom (1)	1/4 x 5 1/4 - 5 1/4
C	Splines (4)	1/8 hdbd. x 1/2 - 13
D	Caps (4)	5/8 x 2 1/8 - 7 1/4

- (2) 1/8" x 1" - 12" Brass Bar Stock
- (2) #8-32 x 1/2" Binding Barrels & Screws

Wine Rack

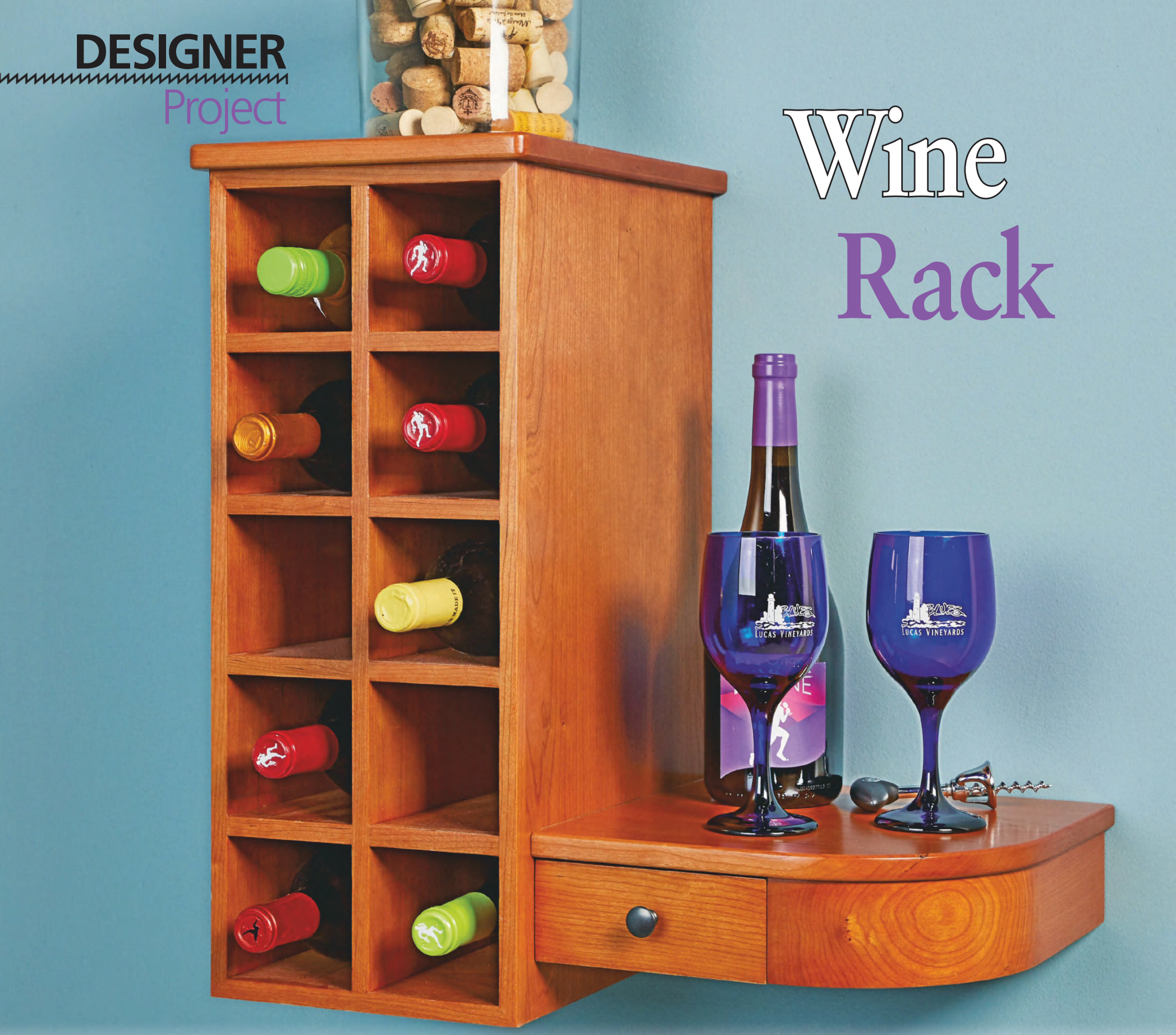

This wine rack goes above and beyond with the simple addition of a shelf. A shelf that houses a drawer perfect for the accessories that you need to have close at hand.

Louis Pasteur said "A bottle of wine contains more philosophy than all the books in the world." If that's the case, then you'll have quite the library at the ready with this project. Not because of its size, it's more due to good design.

The parts for the rack, back and dividers are all made from ½" plywood. This was a perfect compromise when designing the look of the rack. Using ¾" material just felt and looked unnecessarily thick. Plus, using the ½" material for the back added a lot of rigidity to the case. To keep the scale properly proportioned, the drawer is made of ⅜" material. But let's start with the rack that stores the bottles first. That means sizing the case parts.

MITERS. The sides, top, and bottom are joined to each other with miters and splines. The box on the next page provides you with insight about what I'm sharing here. Cranking the blade to 45° is the first order of business. A handy way to

Written and Illustrated by: Erich Lage

control the length of the parts is to use an auxiliary fence on your miter gauge, with a stop block attached to it (Figure 1). This the best way to ensure the parts exactly the same length and that the miters are perfectly square.

SLOTS IN MITERS. The miters alone wouldn't be a very strong joint. So, as you see in the main drawing, the joint between the miters are reinforced with splines. Figure 2 shows how to do this. Once the slots are cut (and the splines are made) you can focus on the grooves and dadoes.

DADOES FIRST. The easiest and strongest way to make the ten compartments in the rack for your wine cache is to join the dividers to the sides and top with dadoes. The dadoes aren't deep — just enough to hold the dividers securely in place. Then you can cut the groove on the rear edge of the parts for the plywood back (detail 'a') at the table saw as well.

ASSEMBLY. I glued up the parts that make up the shell of the rack (the sides, top, bottom, back and splines). While the glue was drying on that assembly, I cut the dividers to size.

DIVIDERS. The vertical divider has dadoes that align with ones in the sides of the rack. These dadoes hold the horizontal dividers that are the shelves for the bottles, once those are cut in the divider, you can glue it in place in the rack.

Follow that with installing the horizontal dividers. After a warm water clean up of glue at the joints, you can turn to the finishing touches on the rack — the edging and a hardwood top.

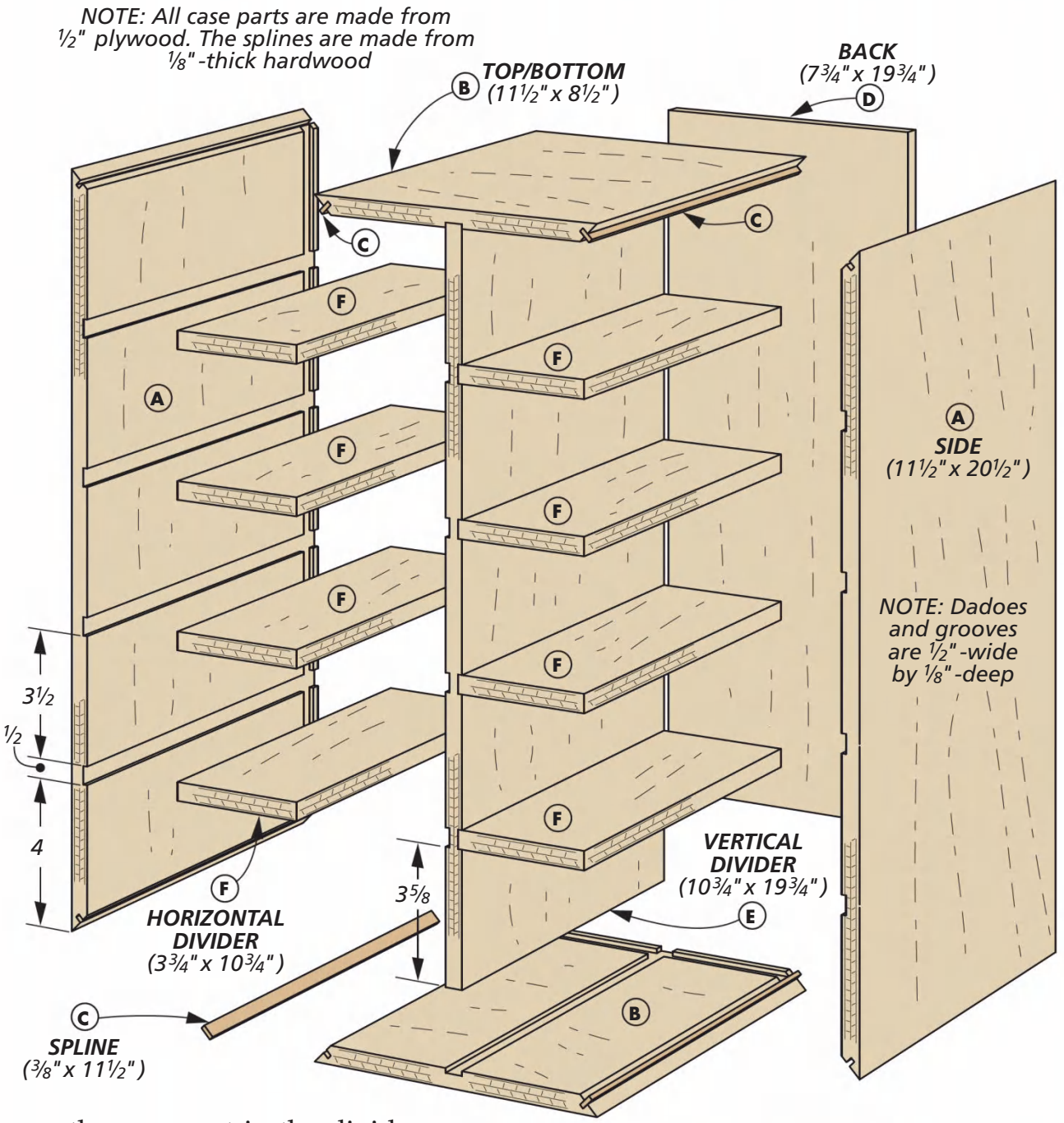

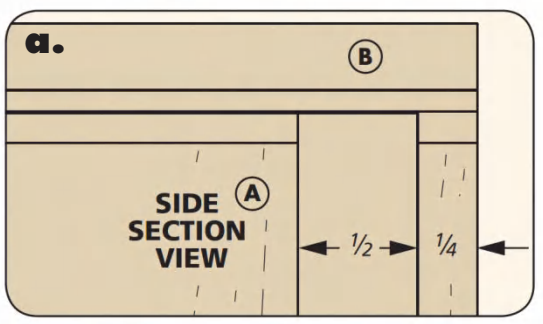

MAKE THE SLOTTED MITERS

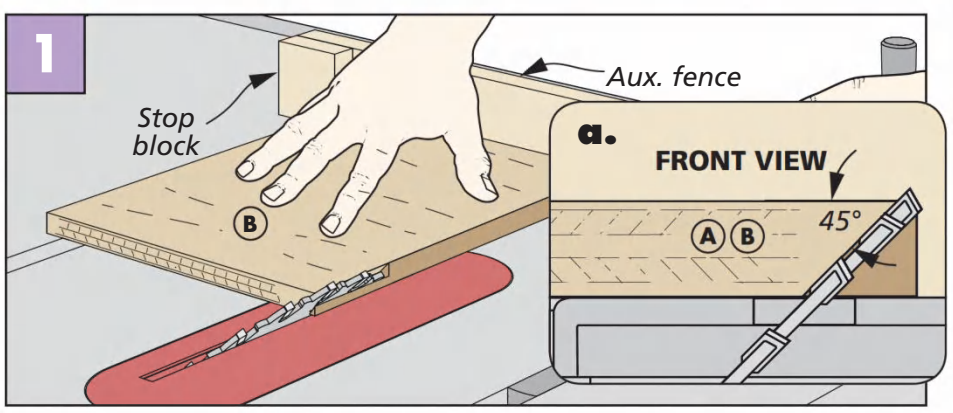

Miters First. The table saw, with assistance from your miter gauge, an auxiliary fence, and a stop block guarantees miters that are squarely cut on all four pieces.

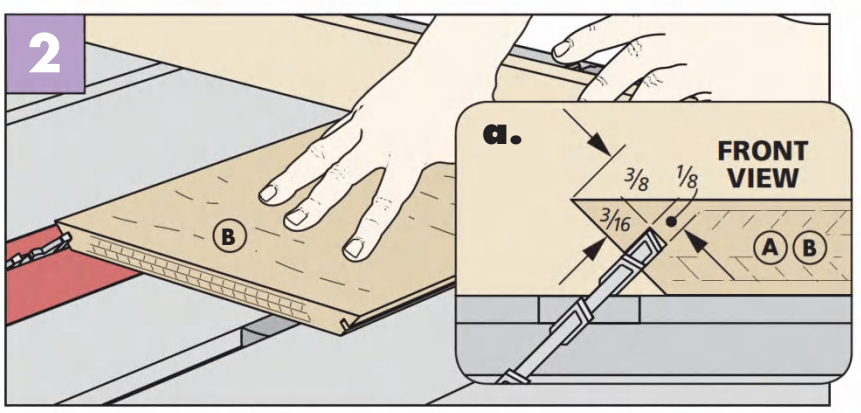

Slots Second. First, flip the stop block to the other side of the auxiliary fence. Now you can cut the slots in the miters of sides, top and bottom.

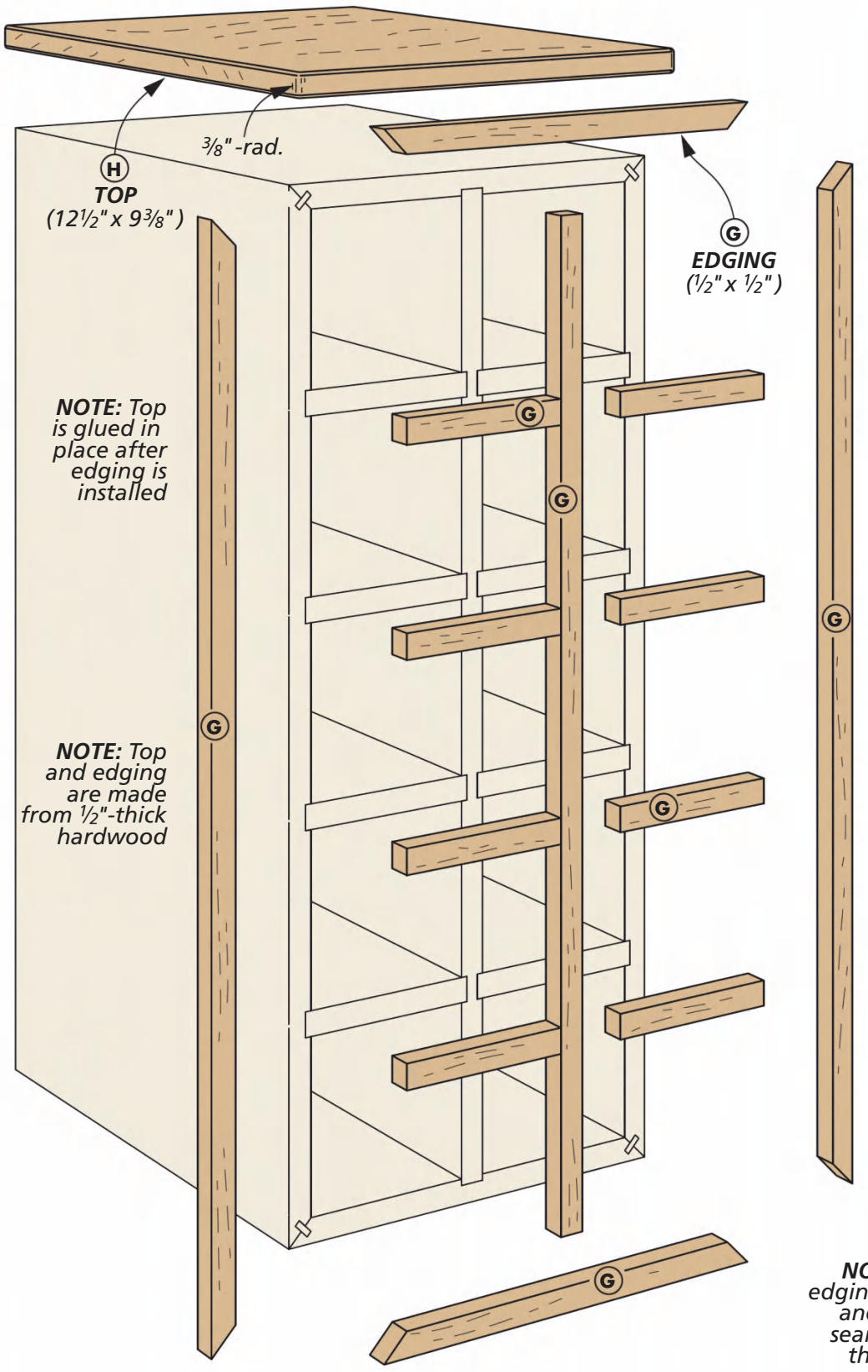

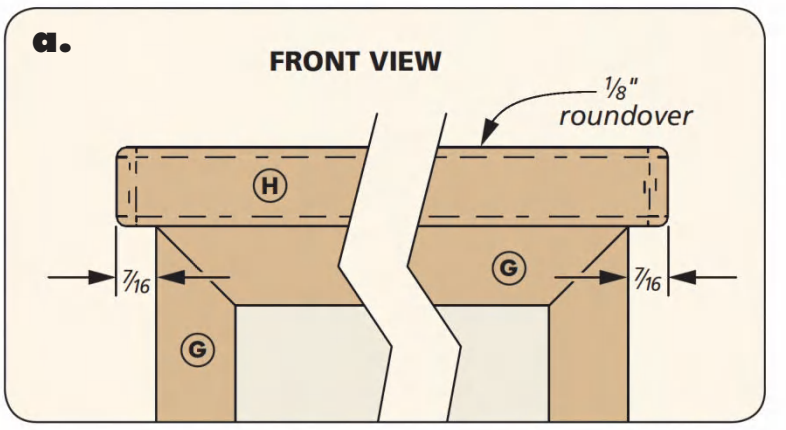

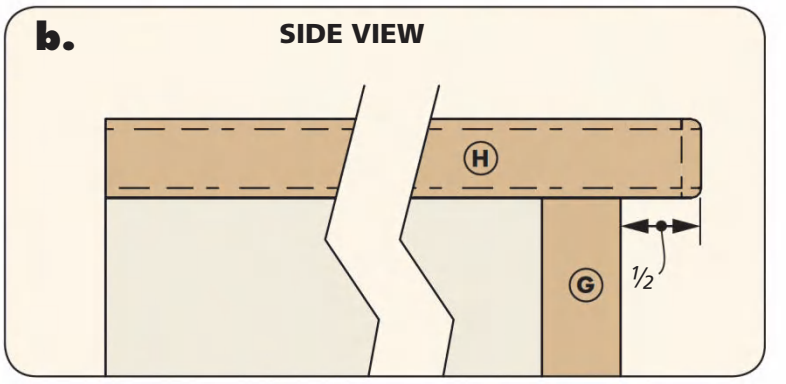

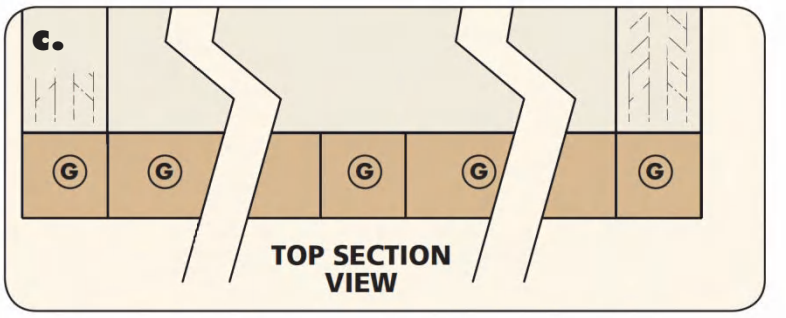

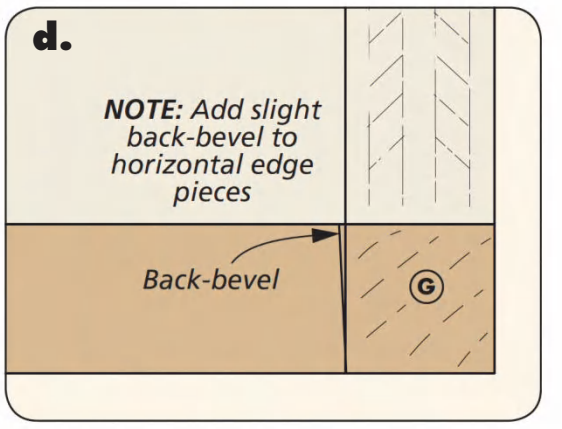

NOTE: Mitered edging covers splines and provides a seamless look to the wine rack

Next, the EDGING & SHELF

Simple strips of hardwood dress up the front of the bottle rack by hiding the raw edges of the plywood and the ends of the splines in the miters. The parts that cover the sides, top and bottom are mitered in the corners like the case frame that it's covering. I started with those pieces that make up the rim.

MORE MITERING. Cutting and fitting each piece is the best way to ensure tight, almost seamless miters. I glue each tailored workpiece in place as I go along. The glue sets quickly enough to work on the adjoining piece without fear of knocking it free. Fitting the pieces that cover the dividers is next on the docket.

TIGHT FIT. The long vertical edging and the short horizontal pieces are butted to each other. And they butt against edging you just installed.

There's a little trick that I use to fit butt joints that's a carryover from my trim carpentry days. Detail 'd' above shows this in action. What you're going to do is put a tiny bevel on both ends of the piece. Start by cutting a 1° bevel on one end of the workpiece. Now hold the short edge of that beveled end in its opening and mark a line at the opposite junction. Then cut the small bevel flaring out from that mark. This back-bevel tactic leaves you with snug-fitting butt joints.

THE TOP. The top, like all the other parts to this point, is ½" thick. The grain runs from side to side. The top is flush to the back but overhangs the front and sides (details 'a' and 'b'). The sides and front edges have a gentle roundover, while the front corners have modest radius easing them.

THE SHELF

Attached to the right side of the bottle rack is a shelf with a

drawer underneath for storing accessories that are handy to have close by when enjoying a glass of wine. The shelf is a convenient place to pour that wine, and stow the open bottle.

The curved front on the outer edge of the shelf looks good and won't inflict a bruise on a person that happens to pass close by. We'll start over at the table saw making a framework that supports the shelf and drawer.

The frame of the shelf consists of four pieces and a block. The block gets shaped into a large arc that is the shelf front on the outer edge of the project. To keep the process efficient, I started by gluing up the blocks that will be for the curved front. While they were drying, I focused on the other parts. It's standard tongue and dado joinery on the frame.

DADOES & TONGUES. With all the pieces cut to final size, I went about cutting the dadoes in the long and short sides (detail 'a'). Next was to fabricate the tongues on the short divider and side, as well as the back (detail 'b'). Finish with a dado in the middle of the shelf back.

SHELF FRONT. Returning my focus to the block for the shelf front, I trim the square inside portions at the band saw and sanded them smooth. As the box below shows, start by cutting the dadoes needed to glue the front to the frame of the shelf. Then, at the band saw, shape the front.

GLUE UP. Make sure everything is flat and flush while gluing up the frame. This isn't too difficult though, the assembly is small. When the workbench is cleaned up from the gluing process, drill the pilot holes and countersinks for the screws that hold the top in place.

THE TOP. To finish the shelf it's pretty straightforward stuff. The top is flush to the back and echoes the shape of the frame with a slight overhang. Ease that edge with a roundover bit. Then screw it in place on the frame. Now it's on to the drawer.

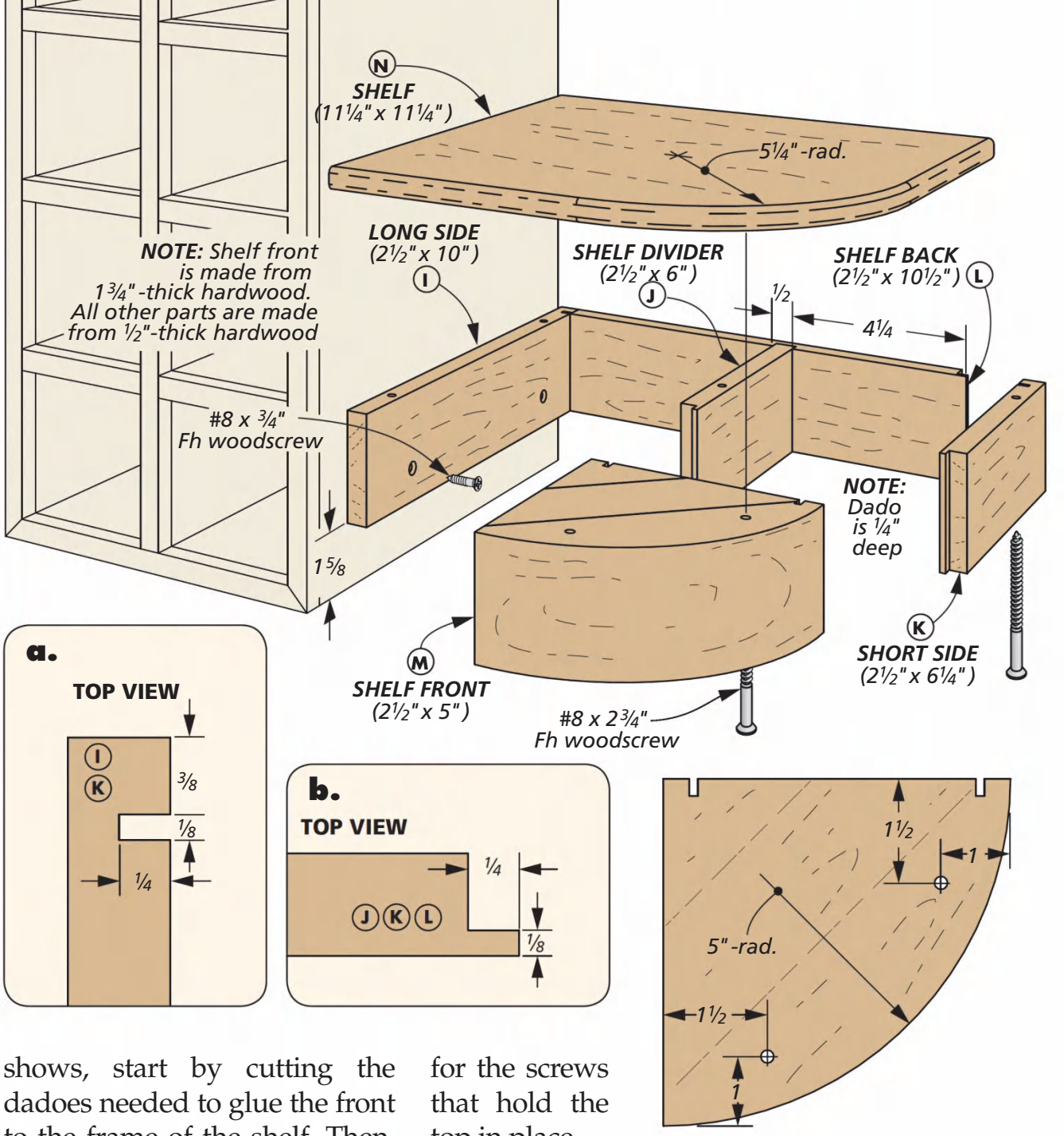

SHAPING THE CORNER

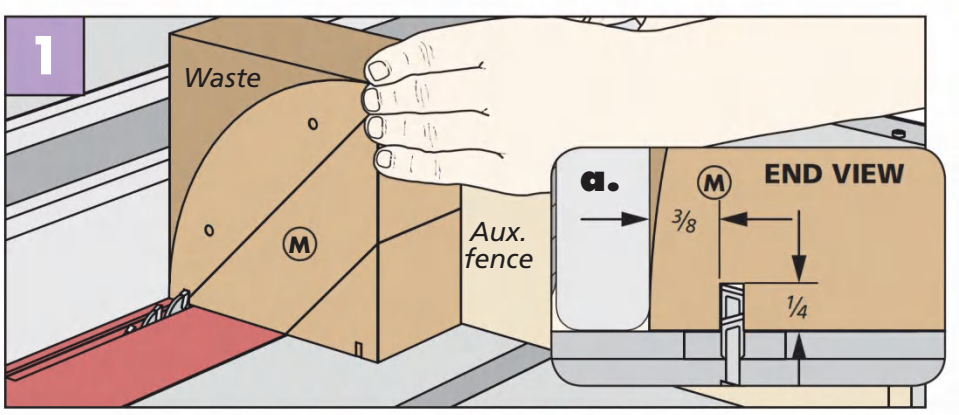

Dadoes First. Use your rip fence as a stop for cutting the dadoes in the shelf front. They're symmetrical on the shelf front so just flip the piece end-for-end to make the second dado.

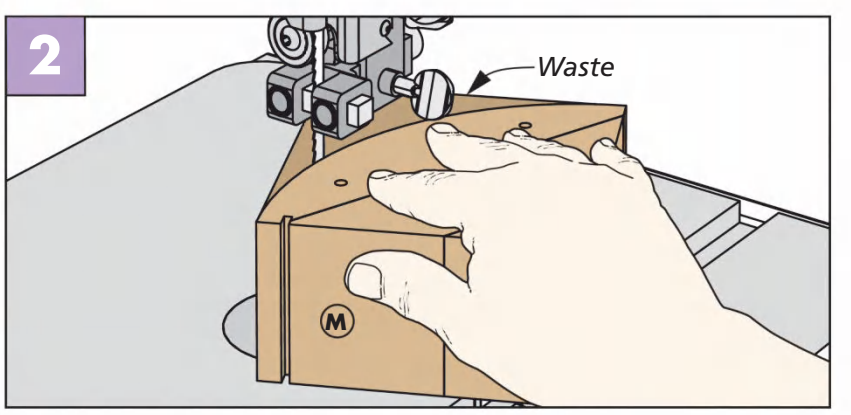

Roughing Out the Curve. Your band saw is the tool of choice for rough-shaping the curve. Stay on the waste side of the line and sand it smooth afterwards.

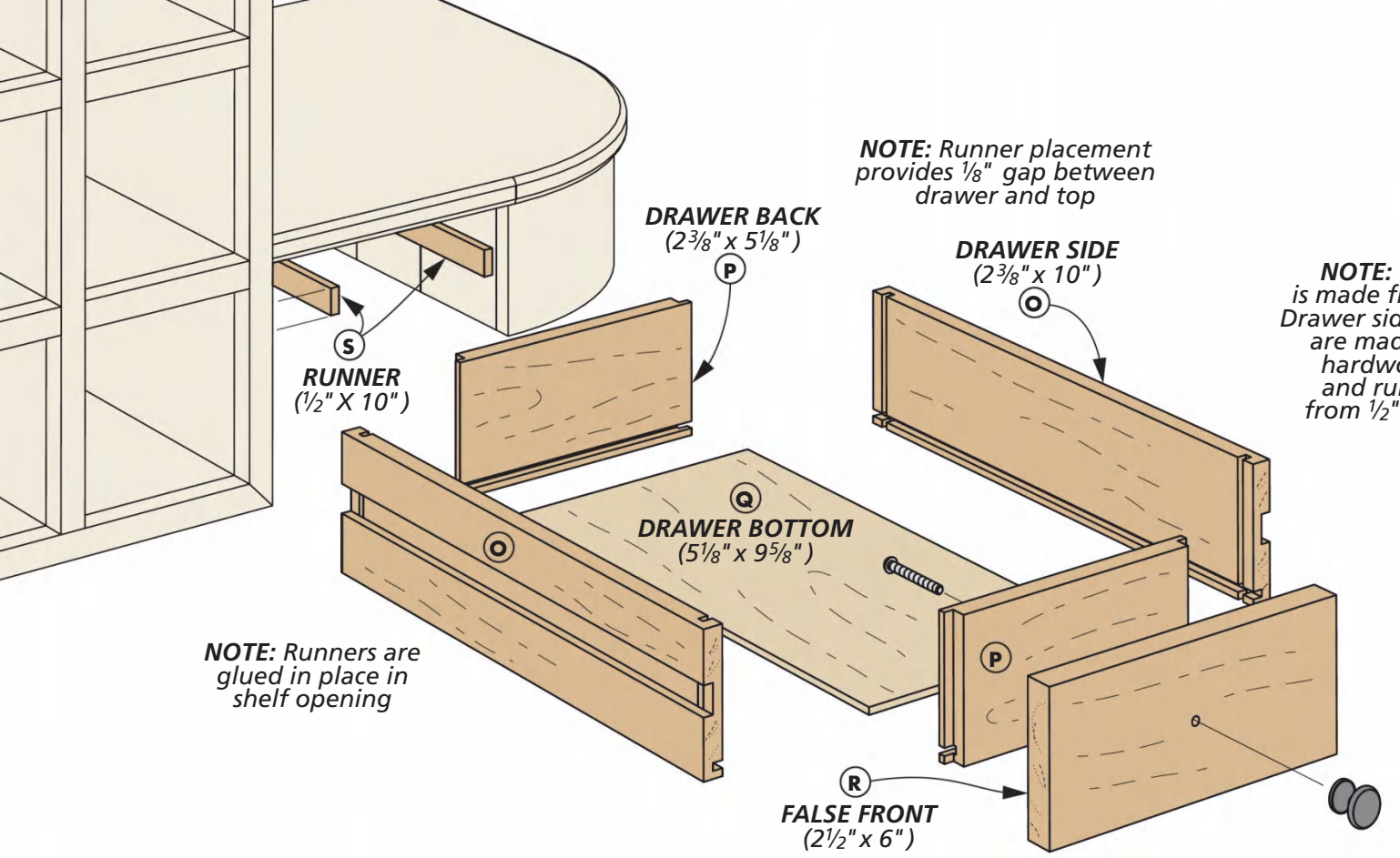

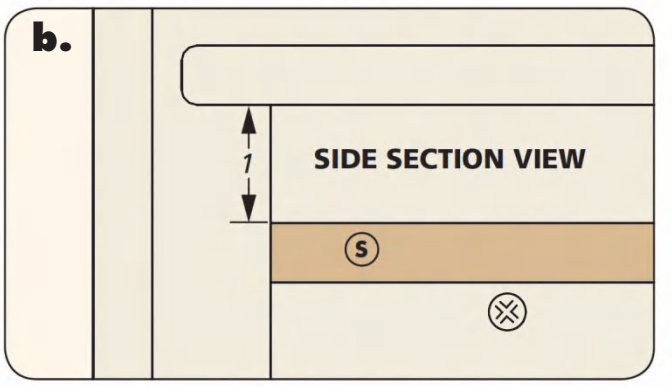

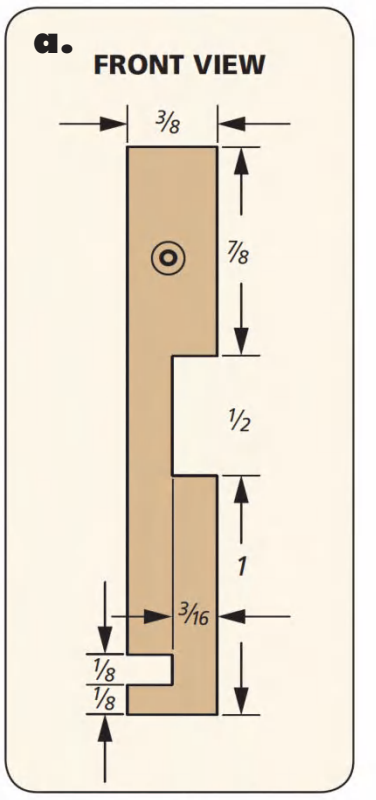

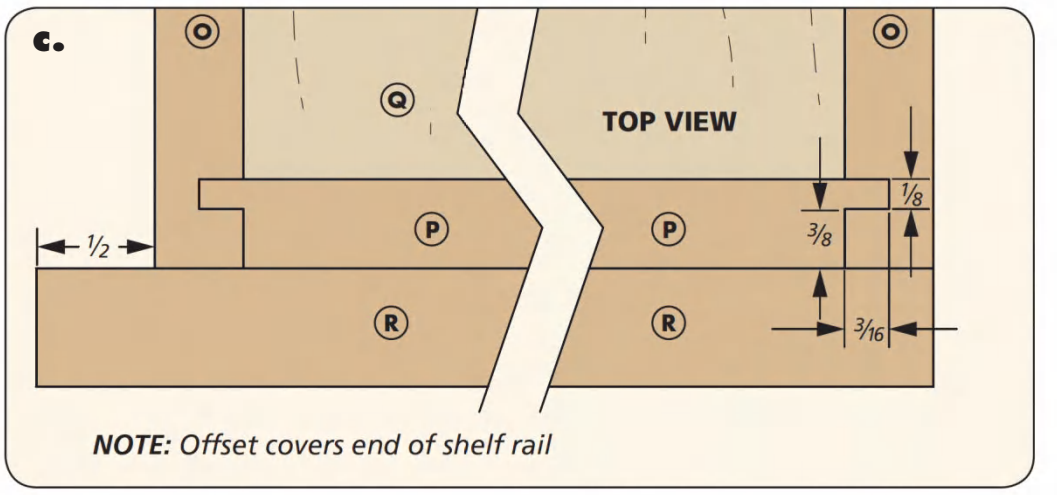

Finish with the DRAWER

Well, this little project is winding down. What's left is to make the drawer and decide where and how you want to hang the rack. First things first, the drawer.

The drawer that is tucked underneath the side assembly is a stout but simple drawer. There's no hardware holding it in the assembly. As you see in the drawing above there are grooves in the sides of the drawers. The grooves will ride on runners that you're going to glue to the sides of the drawer opening.

The false front is offset to the left side of the drawer. This is to hide the end of the long side of the case. The drawer box is 3/8"-thick hardwood with an 1/8" thick plywood bottom. As usual, I'm getting way ahead of myself, so let's back up and cut some boards for the drawer.

SIZE THE PIECES. Cut the sides, back, and plywood bottom that is — the false front is sized as well, but set aside for the moment. As I mentioned a moment ago you'll see in detail 'a' above, that the sides, front and back of the drawer are only 3/8" thick. You could easily leave them the same thickness as the rest of this rack and not spend extra time at the planer. But for my money the effort of making thinner parts gives the drawer a better feel, for what it's worth.

GROOVES NEXT. The grooves for the drawer bottom are first up. No need for a dado set here, in fact all the joinery on the box can be done with a standard blade.

DADOES & TONGUES. Dejà vu? Sorta. Like on the shelf frame earlier, do the dadoes first, then the tongues. Then you can glue up the box of the drawer.

BIG GROOVE. I lied. You do need a dado blade, but not for joinery. You have to cut a groove in the sides of the drawer. Then you can make the runners and glue them in the opening for the drawer. Detail 'b' shows the placement of the runner. I used a spacer to position it in the opening. To complete the drawer, glue on the false front and drill a hole for the pull.

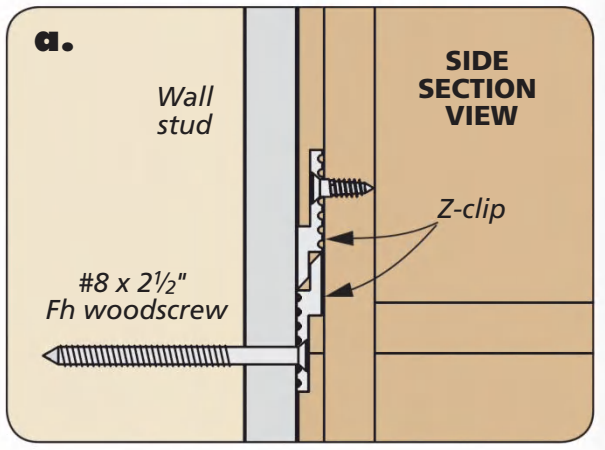

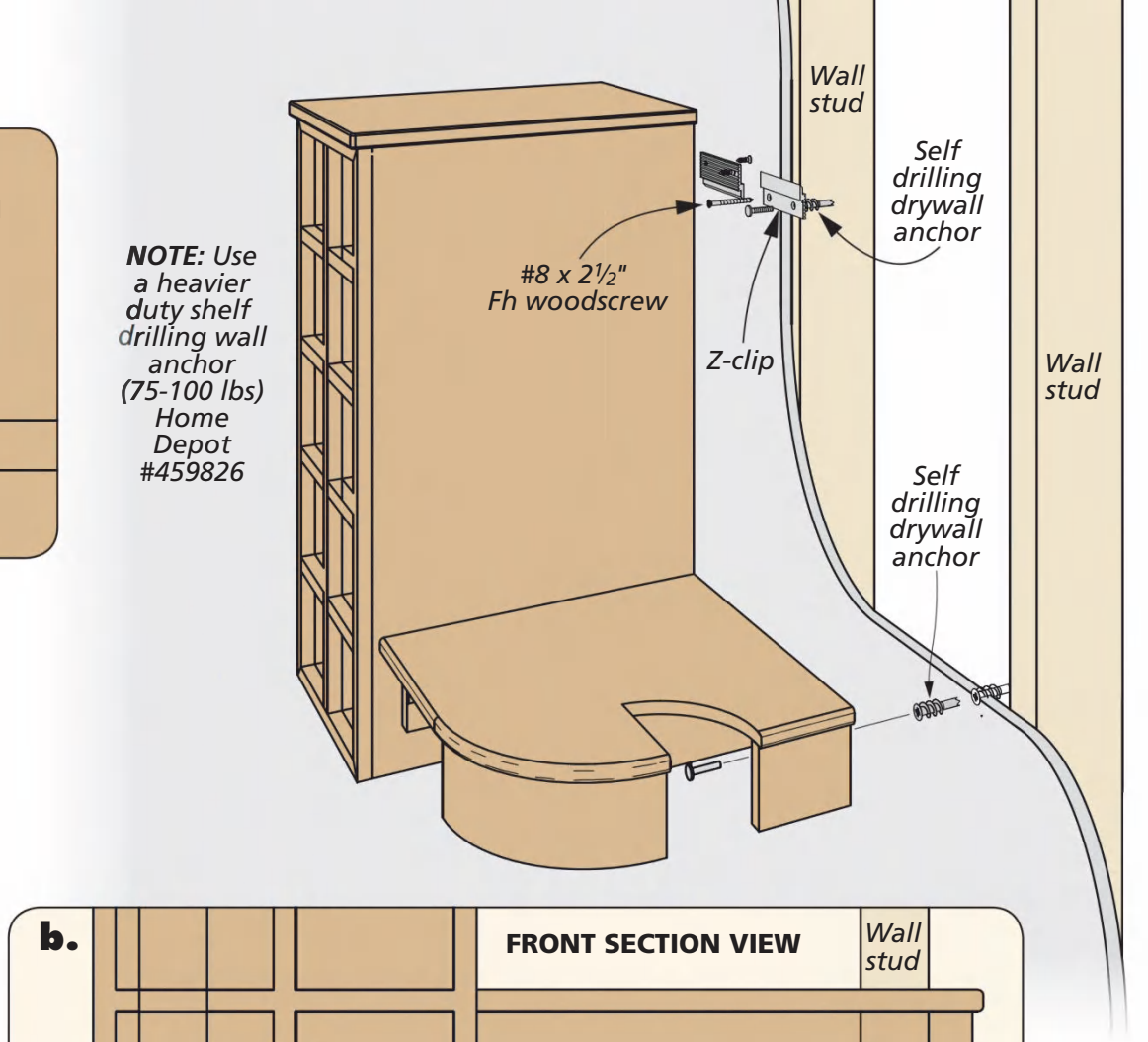

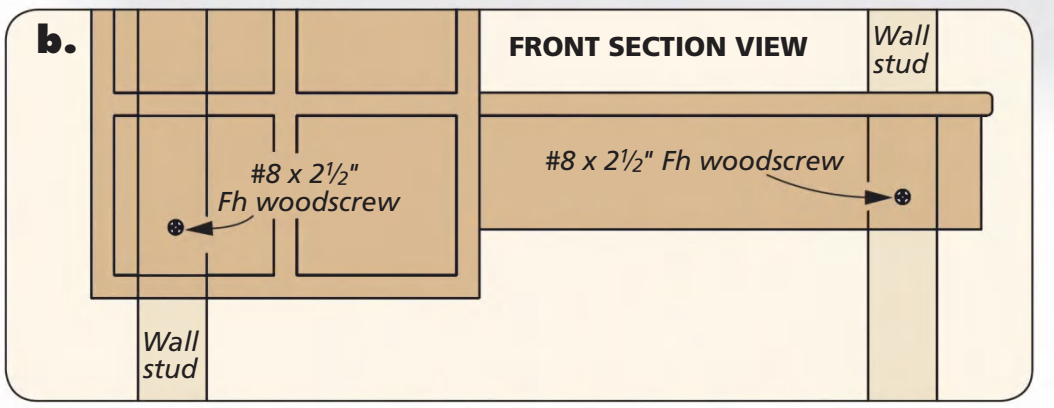

HANGING THE CABINET

As you know the cabinet sitting before you is not that big. But the ten bottles that it can store probably doubles the weight of the cabinet. So you definitely want the wine rack to be securely attached to the wall. There are two ways to do this.

Z-CLIPS. Detail 'a' above and the main drawing shows the hardware in action. It's simply an extruded aluminum profile that has mounting holes drilled into it. They work in tandem, one is attached to the rack. The other to the wall. This method lets you install the rack safely, but remove it fairly easily.

The other option is more permanent — screwing the rack directly to wall studs. Detail 'b' shows how this looks. Here though, placement will be limited by stud location. Either way, you'll have to attach the shelf to a stud or with a wall anchor.

Now, at the end of the day, you can open the drawer and exchange your car keys for a corkscrew. As for being philosophical, that's your choice. W

Materials, Supplies & Cutting Diagram

A	Sides (2)	½ ply - 11½ x 20½	**I**	Long Side (1)	½ x 2½ - 10	**Q**	Drawer Bottom (1)	⅛ ply x 5⅛ - 9⅝
B	Top/Bottom (2)	½ ply - 11½ x 8½	**J**	Shelf Divider (1)	½ x 2½ - 6	**R**	False Front(1)	½ x 2½ - 6
C	Splines (4)	⅛ x ⅜ - 11½	**K**	Short Side (1)	½ x 2½ - 6¼	**S**	Runners (2)	3/16 x ½ - 10
D	Back (1)	½ ply - 7¾ x 19¾	**L**	Shelf Back (1)	½ x 2½ - 10½	•	(6) #8 x 2¾" Fh Woodscrews	
E	Horizontal Divider (1)	½ ply - 10¾ x 19¾	**M**	Shelf Front (1)	2½ x 5 - 5	•	(6) #8 x ¾" Fh Woodscrews	
F	Vertical Dividers (8)	½ ply - 3¾ x 10¾	**N**	Shelf (1)	½ x 11¼ - 11¼	•	(1) Drawer Pull	
G	Edging	½ x ½ - 108 rgh.	**O**	Drawer Sides (2)	⅜ x 2⅜ - 10	•	(1) 36" Z-clip	
H	Top (1)	½ x 12½ - 9⅜	**P**	Drawer Front/Back (2)	⅜ x 2⅜ - 5⅛			

½" x 6½" - 48" Cherry (2.2 Sq. Ft.)

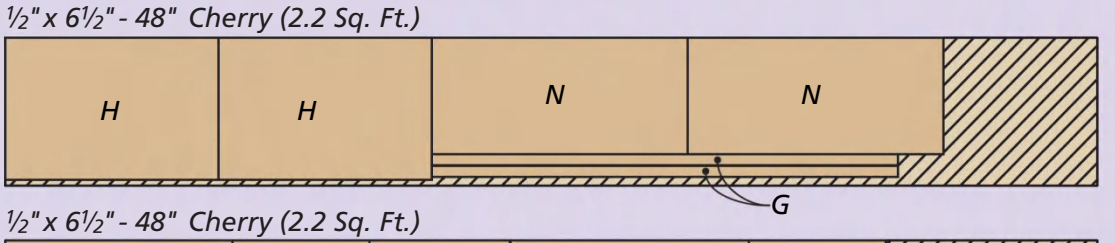

½" x 6½" - 48" Cherry (2.2 Sq. Ft.)

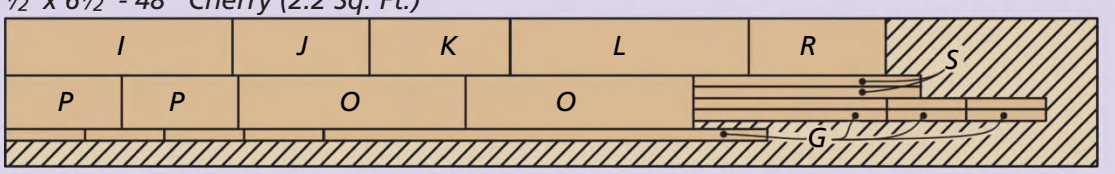

1¾" x 4" - 24" Cherry (1.3 Bd. Ft.)

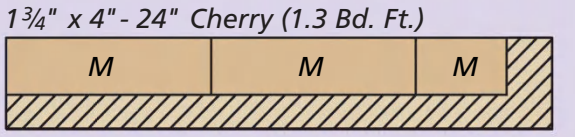

ALSO NEEDED: *One 48" x 48" Sheet of ½" Cherry Plywood. One 12" x 12" Sheet of ⅛" Cherry Plywood*

SHOP
Project

English Workbench

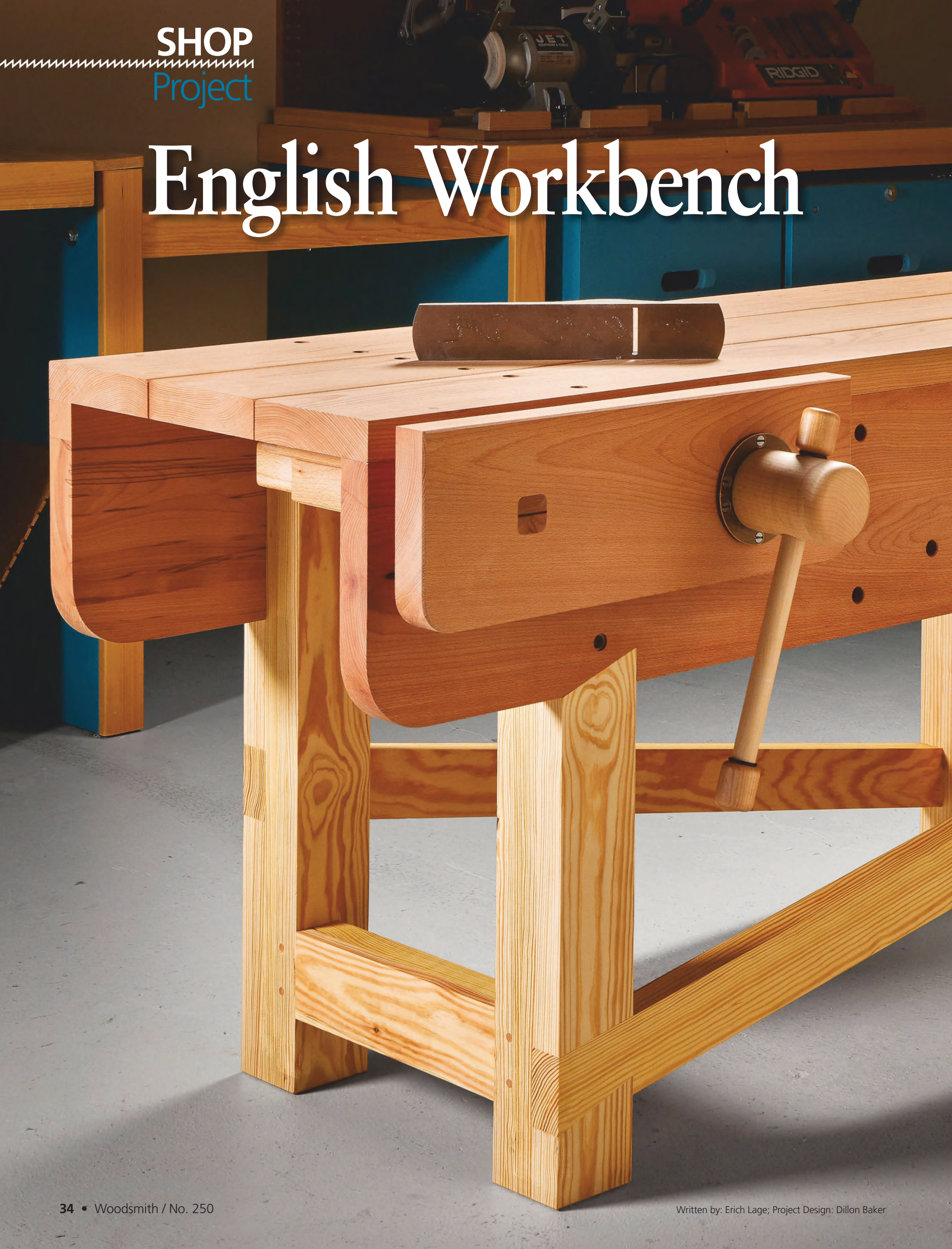

Written by: Erich Lage; Project Design: Dillon Baker

Historically, mobile woodworking was the main function of this workbench. When done, the bench was dismantled and moved to the next job. You'll want this one to stay put in your shop.

Back in the day, there was a wrist watch made by a company named *Timex*. The main selling point of the watch was it's modest price and toughness. The slogan was "It takes a licking and keeps on ticking." True to its word, I had several of those watches that served me faithfully for decades. Well, the bench you're looking at here easily meets and surpasses those qualities.

The modest-sized bench might lead you to think that it could be pushed around if you attempt any aggressive joinery work on it. Not so, the thick top planks, and massive aprons that are let into the base with half-laps (and angled on the ends) means this bench won't budge no matter what you throw at it.

Those aprons have more going for them than just size. As you see here, the front apron works in tandem with a large wood-threaded vise that you purchase online. This dynamic duo plays well with the dog holes that are drilled in the apron and legs. The holes welcome hold-fasts, wood pegs and whatever jig your imagination can conjure up for the sake of controlled joinery. Convinced? Inspired? Well, let's get cracking.

▲ The base of the bench takes the task of providing rock-solid support for your woodworking duties seriously. The angled half-laps in the legs lock the stretchers and top firmly in place.

Illustrations: Dirk Ver Steeg

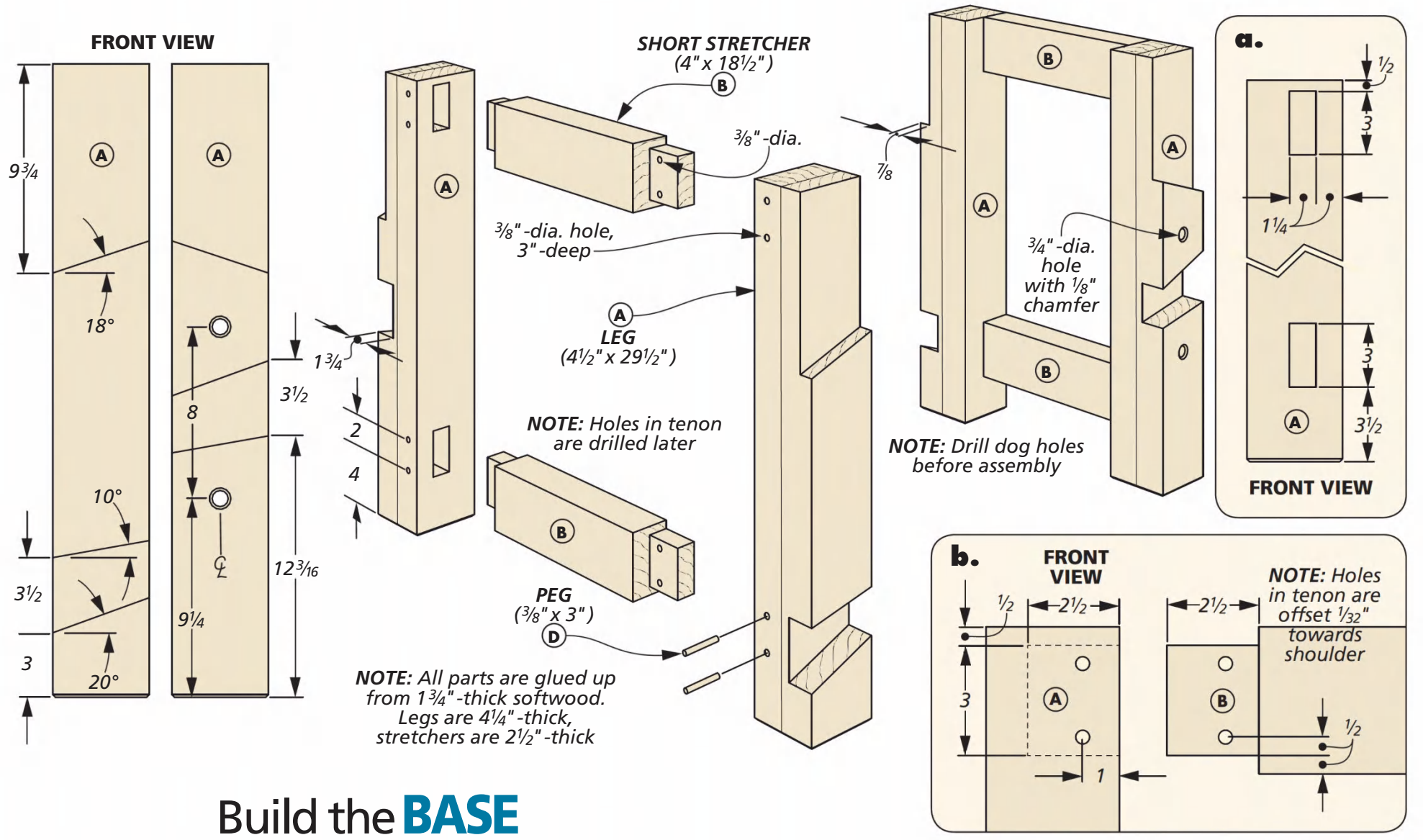

Build the **BASE**

As you see in the drawing and details above, the thick legs sport mortises that are cut into the inside faces. To seal the joinery deal, the tenons that fit in the mortises are drawbored in place. On the opposite faces of the mortises, there are dadoes that will hold the long stretchers and aprons. It all starts with gluing up the blanks for the legs.

BIG DADOES. Kick off this phase by trimming the legs to their final length. Now you've got some big dadoes to cut. The box below shows two ways to attack this, first at the table saw (Figure 1). Here, you're making a lap that will join with the apron. The angled shoulder on the leg, and the one on the apron lock together and prevent racking.

Figure 2 addresses the dado for the long stretchers that angles across the front and back in opposite directions. As you see in the detail, it's a much deeper dado than the one you just finished. So I used a router, pattern bit, and a straight edge to make it a clean and crisp dado.

MORTISES. Mortises for the tenons on the short stretchers are

LEG DADOES

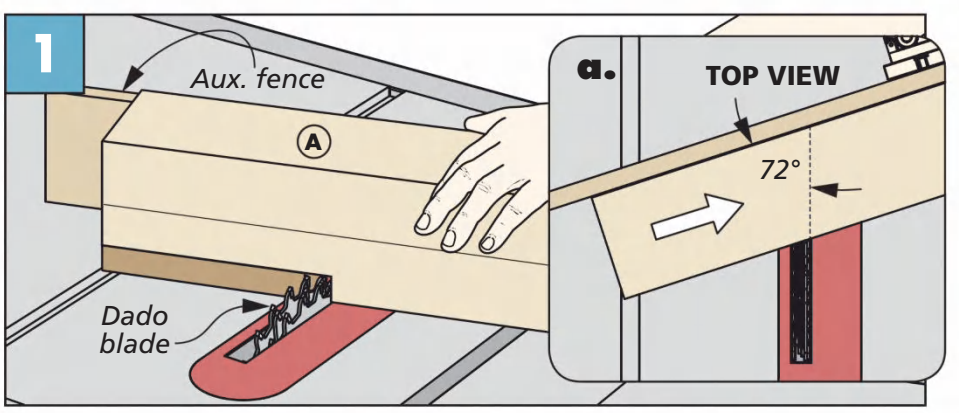

Dadoes for Aprons. Start by attaching an auxiliary fence to your miter gauge and set it at the proper angle. After making the shoulder cut, nibble away the rest of the waste.

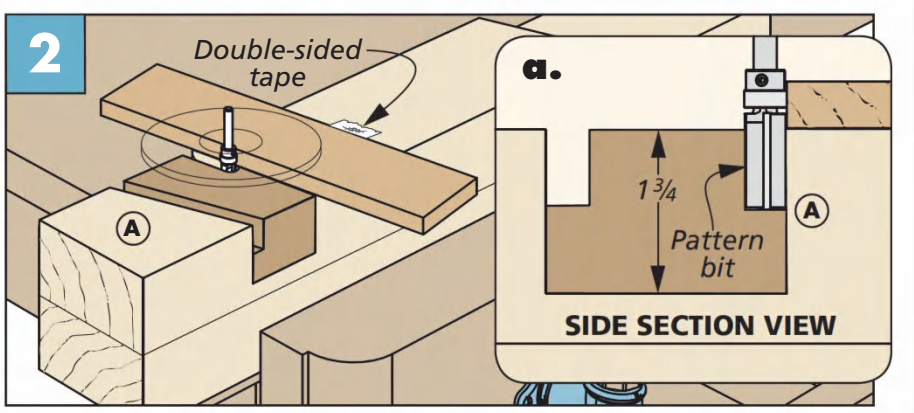

Dadoes for Stretchers. The stretchers set flush in the leg. I used a straight edge to guide a pattern bit in my router. Multiple passes were required to make the dado.

a job for your drill press and a Forstner bit. A Forstner bit makes quick work of removing the waste and leaves a fairly flat bottom. A chisel will clean up the corners and walls just fine.

The main drawing on the previous page and detail 'b' shows that there are holes to drill into the legs for some pegs, go ahead and do that now. These are the holes that you'll use along with the drawbore technique to tie the stretchers tightly to the legs. Now it's on to making the stretchers, starting with the short ones.

SHORT STRETCHERS. As you see in Figure 1 to the right, the tenons are offset and flush to inside face of the stretchers. This makes the opposite face flush with the outside of the legs, as shown in the drawing below.

LONG STRETCHERS. The long stretchers that are opposite angles to each other on the front and back of the bench further guarantee that no racking or "walking" will be done by this bench. The dovetail-like notches in the ends of these stretchers nestle into the notches cut into the leg. Detail 'a' shows the angles and dimensions for the ends.

When the lay out was done, I used three saws to shape them. The angle cuts on the ends were done at the miter saw. Then the shoulders are cut at the table saw. Follow this with the band saw to make the long cheek cuts.

TENONS ON THE SHORT STRETCHER

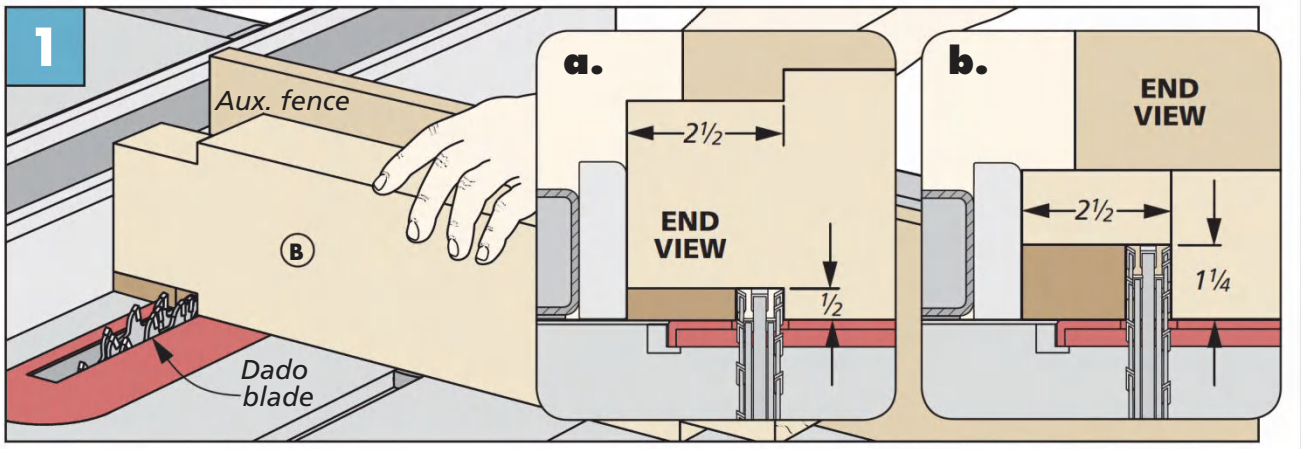

Shoulders First. Use the fence of your table saw as a stop to establish the shoulders of the tenons on the short stretchers. Raise the blade to offset the tenon.

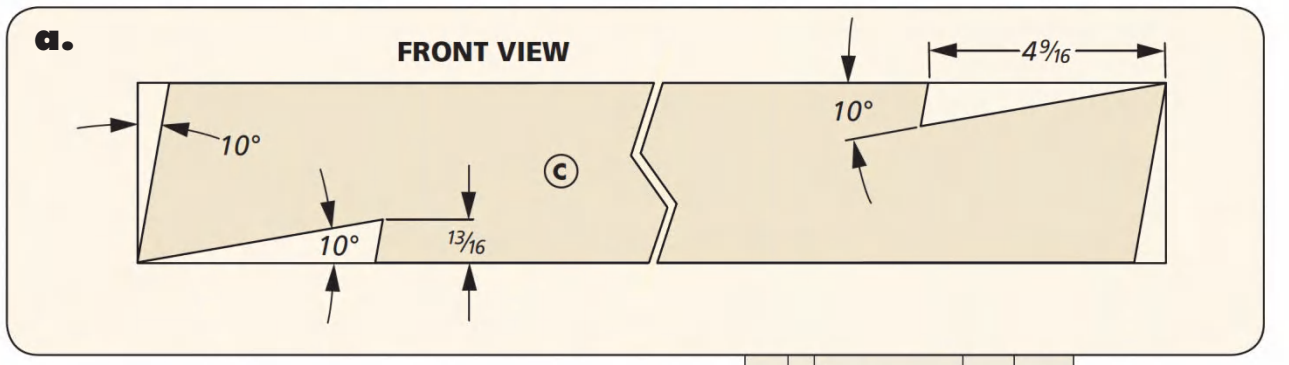

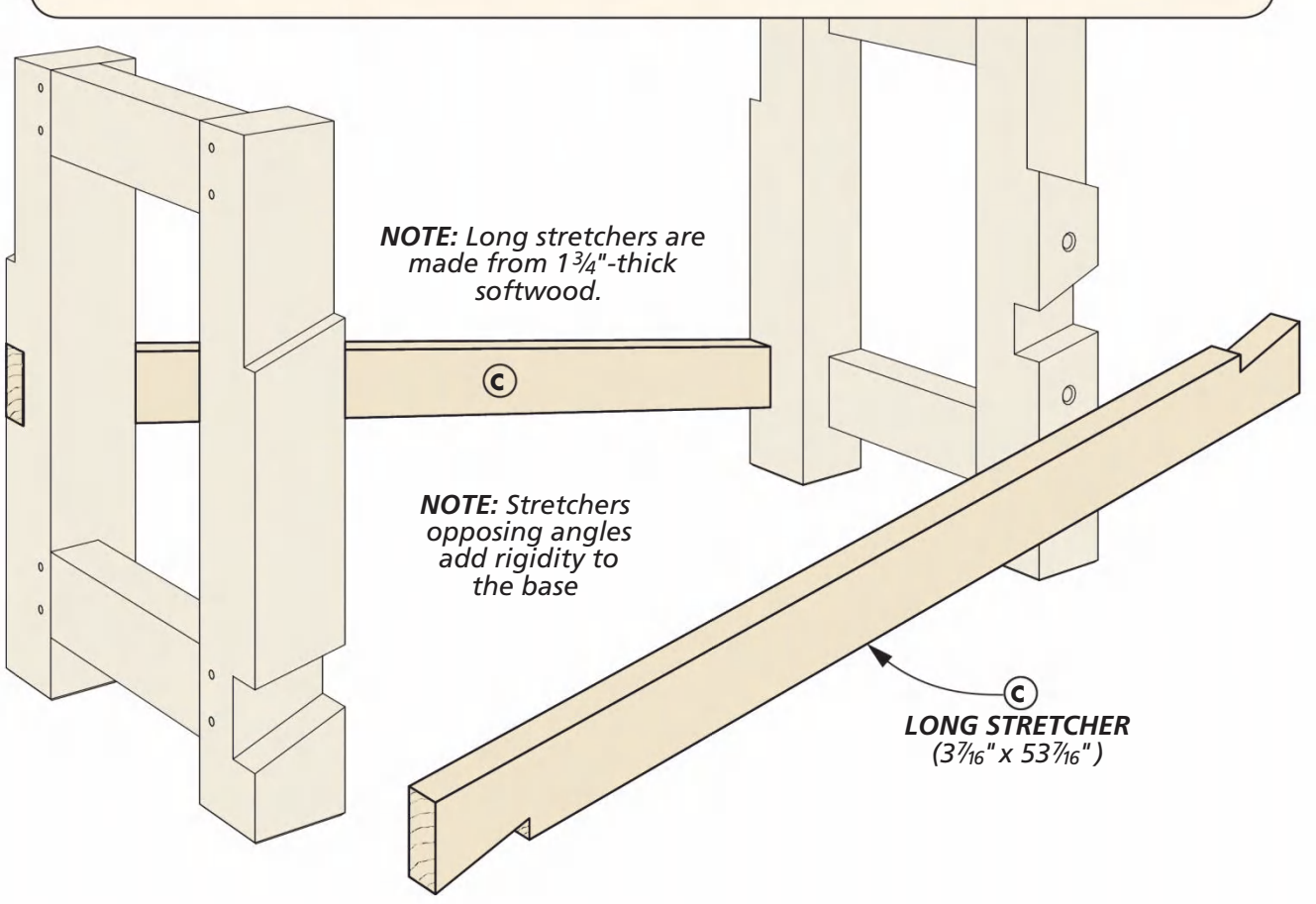

ASSEMBLY

All the heavy cutting and chopping of these big parts is about to pay off. I started by assembling the ends. This meant bringing the front and back legs, the short stretchers, and the pegs that tie them together to the workbench.

DRAWBORE. Note that I didn't mention glue and clamps. The main merit of drawbore joinery is that you don't need glue to create a long-lasting joint. Start by dry assembling the side. Then, with a brad-point bit the same size as the hole, mark its location on the tenon. Tap the members apart and make a new mark based on the old, *towards* the shoulder. The distance doesn't have to be much, 1/32" or so will give you a tight joint. Now re-assemble the sides, and drive the pegs through the legs into the tenons. Then trim and sand them flush.

Finish up by gluing the long stretchers in place with several F-clamps, checking the base for square as you go along. With that done, you can turn your attention to the aprons.

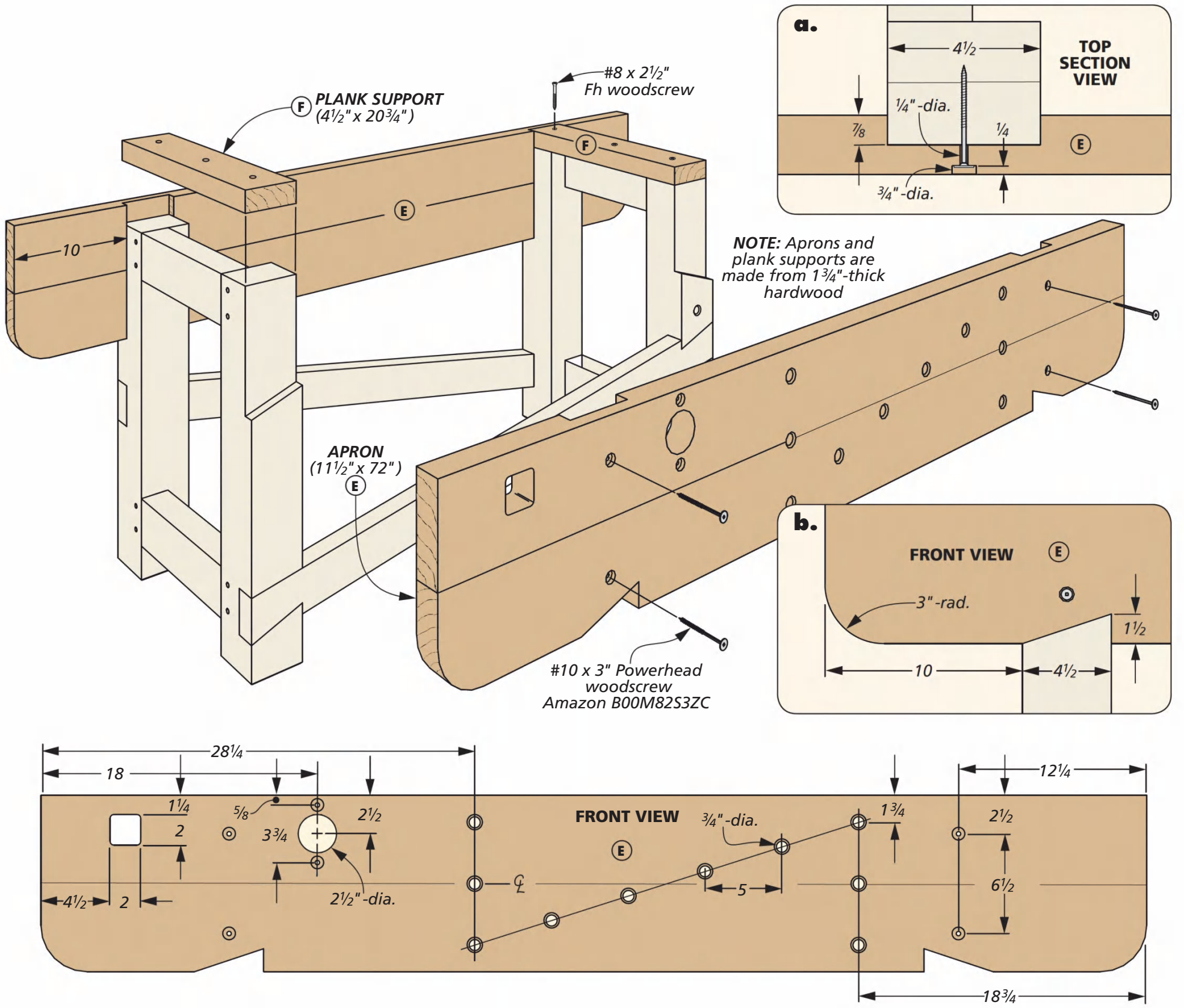

Addressing the **APRONS**

The material for the aprons (and the planks that make up the top for that matter) are all derived from 8/4 beech. The aprons are pretty wide so you'll probably have to glue them up from narrower boards.

As you see in the main drawing above, the aprons on the front and back of the bench start out identical up to and including the holes for the mounting hardware (photo at left) that fasten them to the base. At that point, the back apron is done and can be set aside. Also, there are two plank supports that are screwed to the top of the base.

▲ Powerhead woodscrews do a great job of locking the aprons and planks in place.

The front apron, on the other hand has quite a bit more work before it's ready to be screwed to the base. There are a lot more holes to drill. Some to hold the vise, and some to hold the accessories that work with the vise. But lets start at the beginning.

DADOES & NOTCHES. The back side of the aprons have two dadoes that join the half-laps on the legs. A straight edge, pattern bit, and my router are called into duty to make the dadoes. Figure 1 on the next page provides the details on how to do this.

At the bottom of these dadoes is an angled notch (Figure 2). A jigsaw made short work of the angled part of the notch. When that mess is cleaned up, you can use your back saw to cut the shoulder. A quiet moment with little dust flying is always a nice break during a project.

THE BIG EASY. The bottom corners of the aprons have an arc cut

into them because pointy parts at thigh height can be painful. The radius is shown in detail 'b' on the previous page.

Then it's back to making noise, I used a jigsaw and belt sander to shape and smooth the corner. The front edges of the aprons need to be knocked back just a little bit with a sanding block.

MOUNTING HOLES. The long *Powerhead* screws are what draw the aprons tightly against the legs. The screws have a large head that you'll need to make a counterbore for (detail 'a' on the previous page).

Now you can install the back apron. You can set the apron in place and drill the pilot holes in the legs. This step is really important. If you don't drill the pilot holes deep enough, and the screws bottom out, it's pretty much a guarantee that you'll snap off the head of the screw.

VISE OPENINGS. To accommodate the vise, you need to make two openings in the front apron. The large circle you see on the previous page is for the wood screw of the vise to pass through (a hole saw works well here). The mounting holes you see above and below it are for the vise nut that you'll install later.

The other hole isn't a hole, it's a square with rounded corners. The parallel guide of the vise passes through this opening. Figures 3 and 4 to the right show how to make this.

MORE HOLES. The last thing to address on the front apron is the holes needed for hold-fasts, or bench dogs. These accessories will support the different sizes of workpieces that you'll want to work on. To keep the holes square to the apron, I mounted the drill into a drill guide. A chamfer bit in my palm router tidied up the edge of the holes. (Earlier I drilled the two holes in the right front leg of the base.) Now it's time to install the vise.

APRON DETAILS

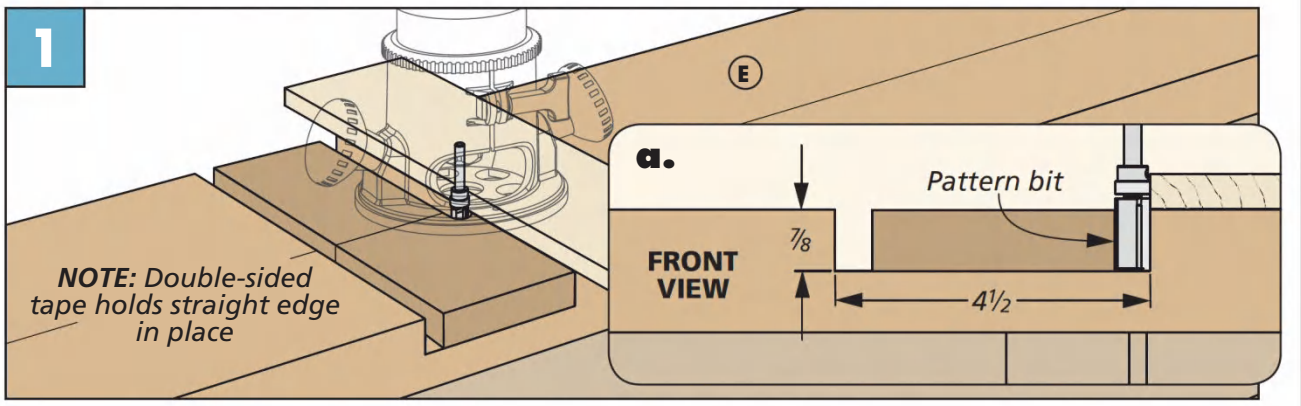

Large Dadoes. A straight edge combined with a router and pattern bit takes all the stress out of making the dadoes in the apron that mate with the base.

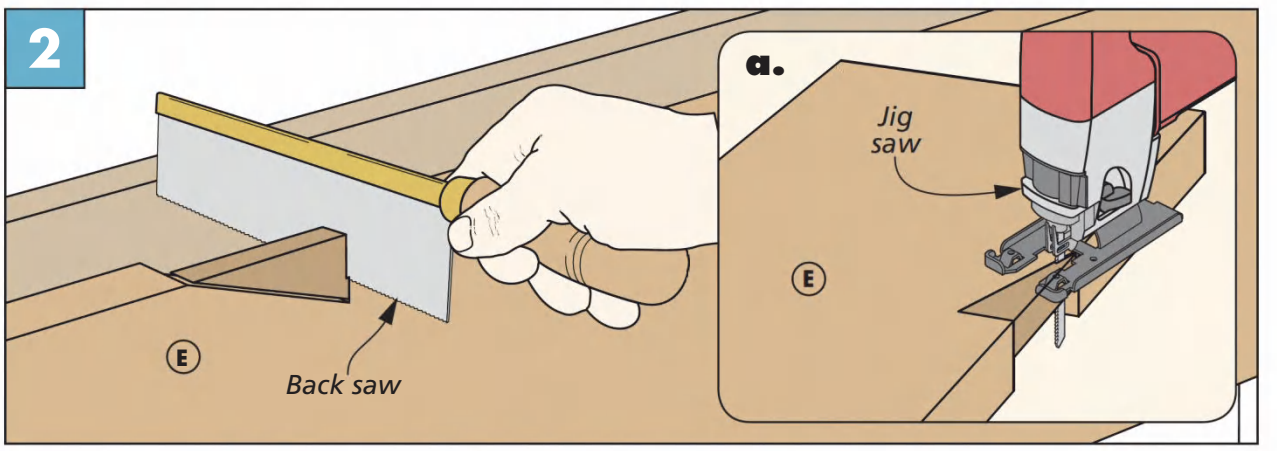

Angled Notch. The notches that locks the aprons to the base are made with a combination of two saws. A back saw for the shoulder, and a jigsaw for the angle.

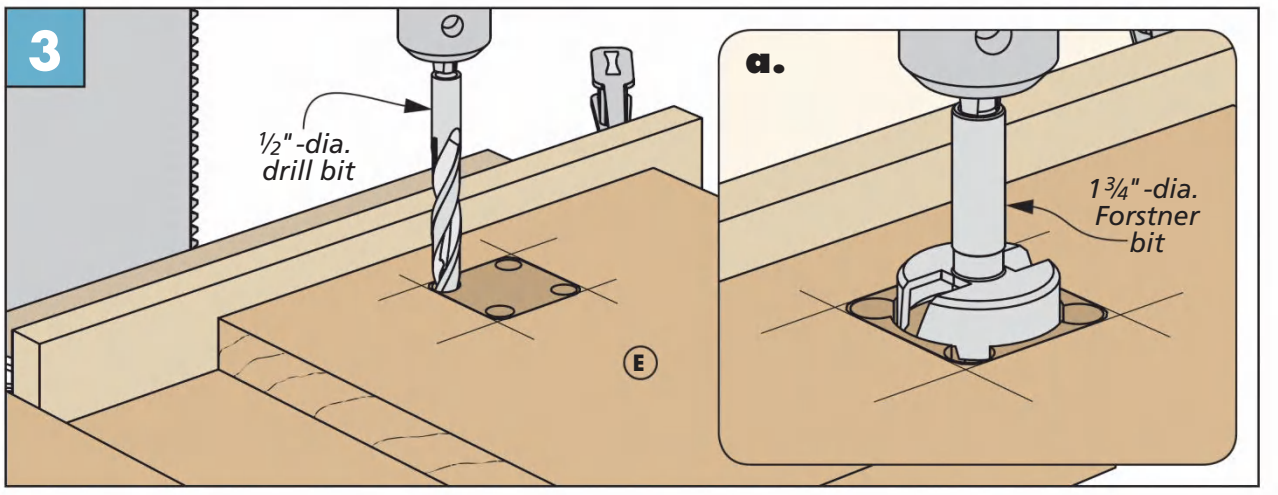

Guide Opening. A combination of drill bits are needed to rough out the opening in the apron for the parallel guide. Then a use a router and pattern bit to clean up.

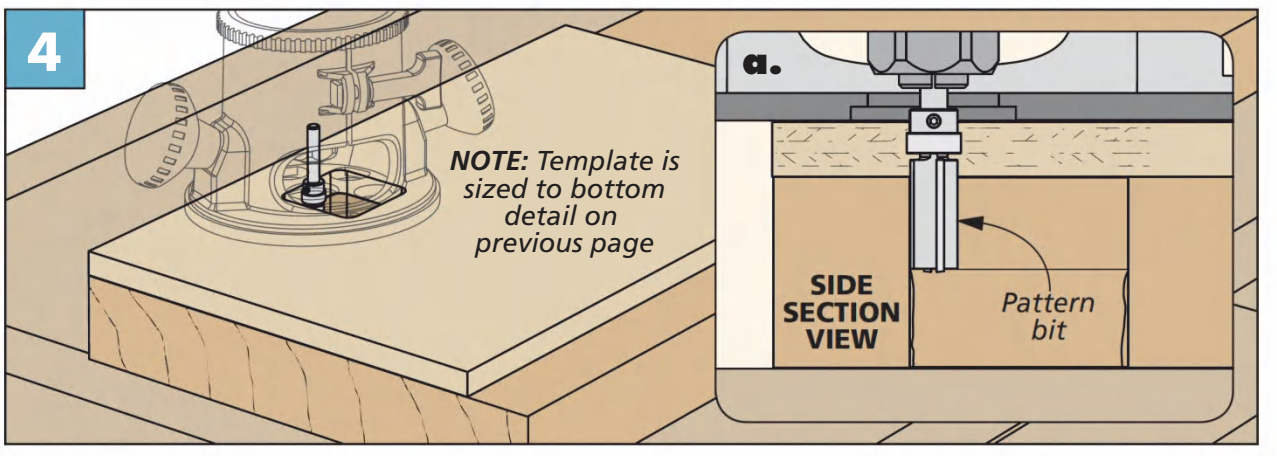

Tidying Up. To clean up the opening, your router and pattern bit are called for. The template gets you started, then the walls of the opening guide the bit.

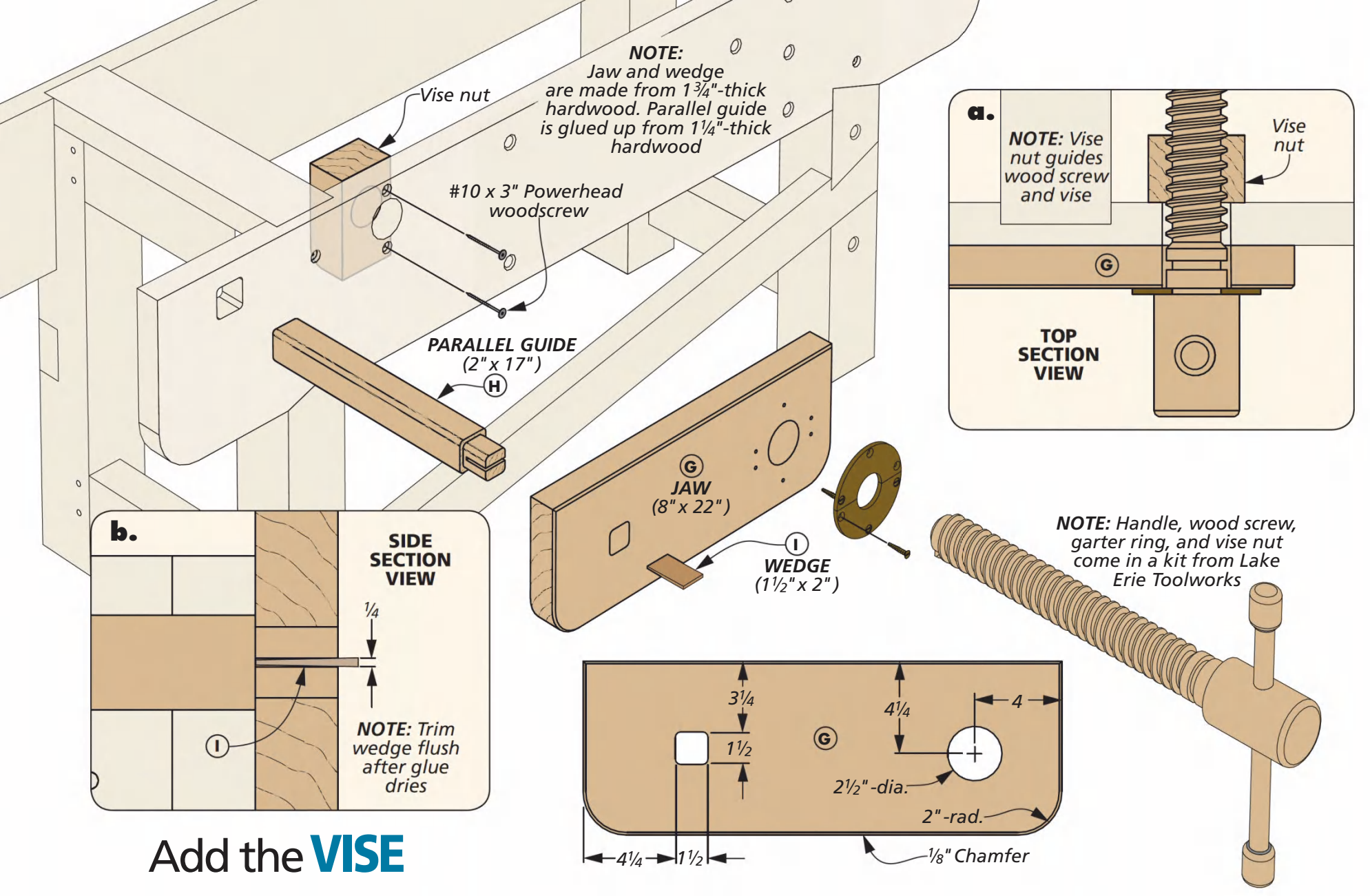

Add the VISE

The vise at the left end of the workbench is something to behold. It's a beast indeed. The upside to it is that most of the parts come from a kit that you can purchase online. *Lake Erie Toolworks* made the version we used for this bench.

For the sake of a uniform look, the jaw is made from the same hardwood you're using for the aprons and planks. To keep this big jaw from binding when operating it, we've added a parallel guide to the left side of the jaw. It runs through the apron and is stabilized by a mounting guide that you'll add at the very last. First up is making the jaw.

THE JAW. The drawings above give you the details for making the jaw. The holes are similar to the ones in the apron. But, the opening for the parallel guide is smaller than the one in the apron. So you'll have to make a new template to accommodate this. The hole for the wood screw is the same size as the one in the apron. Don't drill this hole yet, that happens later.

THE JAW PROFILE. The arcs on the bottom corners of the jaw are made with a jig saw and sander like you did on the aprons. To complete the jaw, chamfer the front edge with your router.

PARALLEL GUIDE. As I mentioned, the long block that is to attached

MAKING THE PARALLEL GUIDE

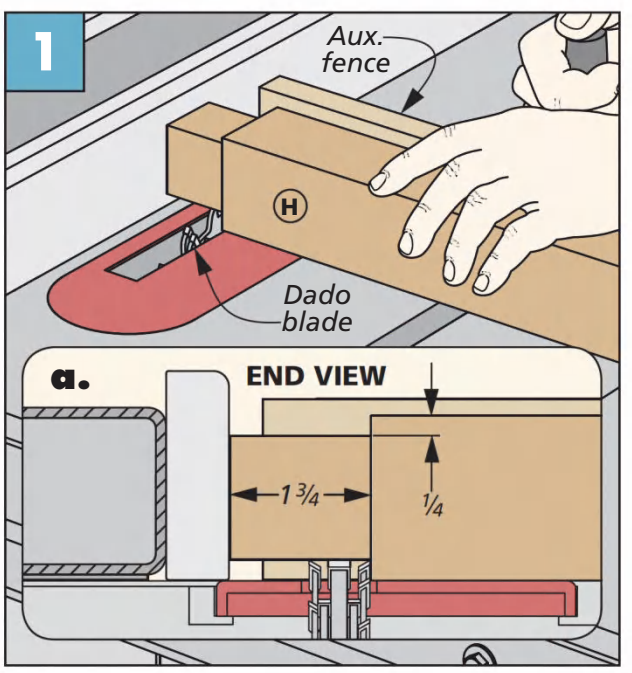

Table Saw. The rip fence is the stop when cutting the shoulders on the parallel guide. Nibble away the rest of the waste.

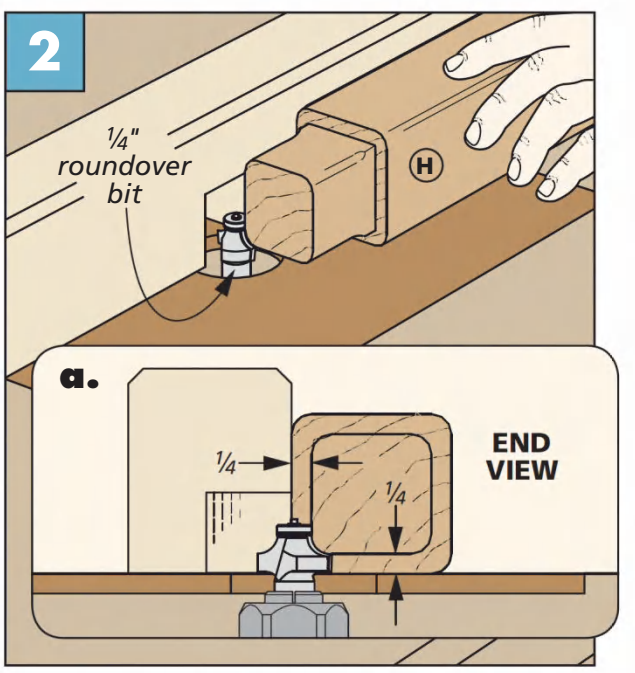

Router Table. A roundover bit eases the edges of the tenon and body. A little handwork remains on the tenon.

to the left end of the jaw is going to help the vise travel smoothly. It's just a square piece of hardwood that has a tenon on the end to join with the jaw.

After sizing the guide, I cut the shoulders of the tenons at the table saw (Figure 1, previous page), then nibbled away the cheeks. Cutting the slot for the tenon wedge was done quickly at the band saw (detail 'b', previous page). I made the wedge for the slot while at the band saw.

To complete the guide, I rounded over the edges at the router table (Figure 2). Go ahead and glue the guide in place and tap the wedge into the slot.

INSTALL THE VISE

Installing the wood vise screw properly involves several steps, these are laid out in the box to the right. Figure 1 shows the vise clamped in place, aligned to a spacer. The spacer is used in each step. This accounts for the fact that the top of the jaw is flush with the planks that make up the top of the workbench, not the apron. With that in place, you can mark the location of the wood screw opening on the back side of the jaw.

VISE NUT. After the hole is drilled, slide the jaw back in place on the apron. Figure 2 shows installing the vise nut. The vise nut guides the wood screw (and the jaw) in and out of the apron.

For the last time, slide the jaw back into the apron. Then thread the wood screw through the nut and draw the jaw to the apron. The garter rings hold the screw to the jaw. Mark and drill the pilot holes (Figure 3). Then screw the rings in place.

That task completes the fussy part of this project. And it leaves you with just a couple more things to do, then this bench will be ready for action.

ALIGN THE JAW & INSTALL THE VISE

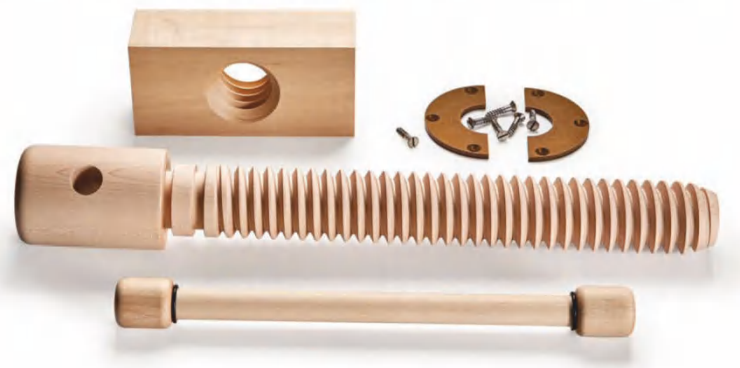

► The wood vise screw premium kit from *Lake Erie Toolworks* comes with everything you need but the jaw. A hard maple screw, nut, handle, and brass mounting hardware (called garter rings) are included in the kit.

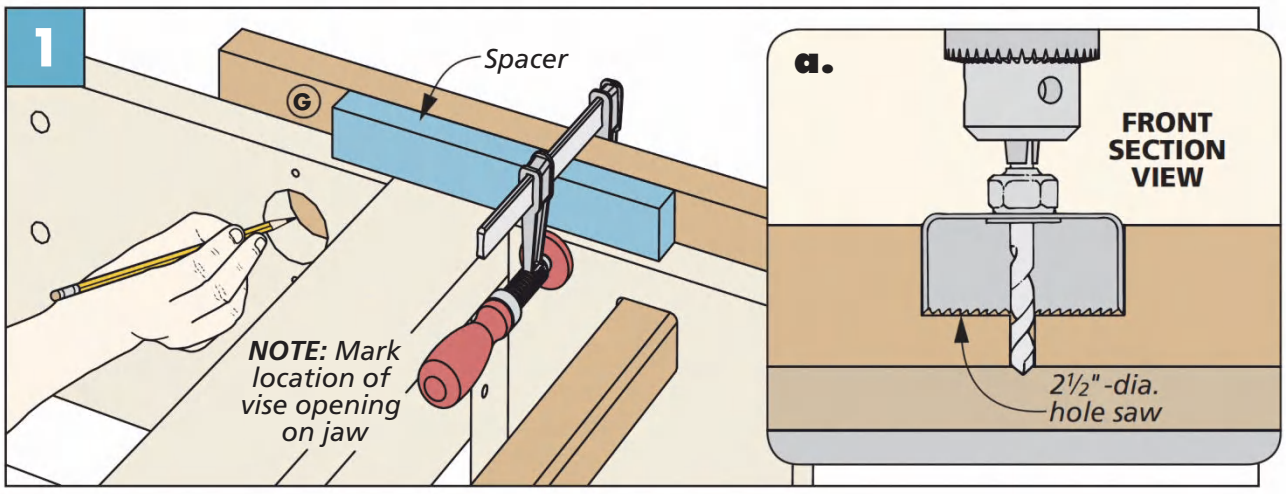

Wood Screw Opening. To accurately align the jaw to the apron use a spacer block the same thickness as the top. Then mark the location of the hole through the apron.

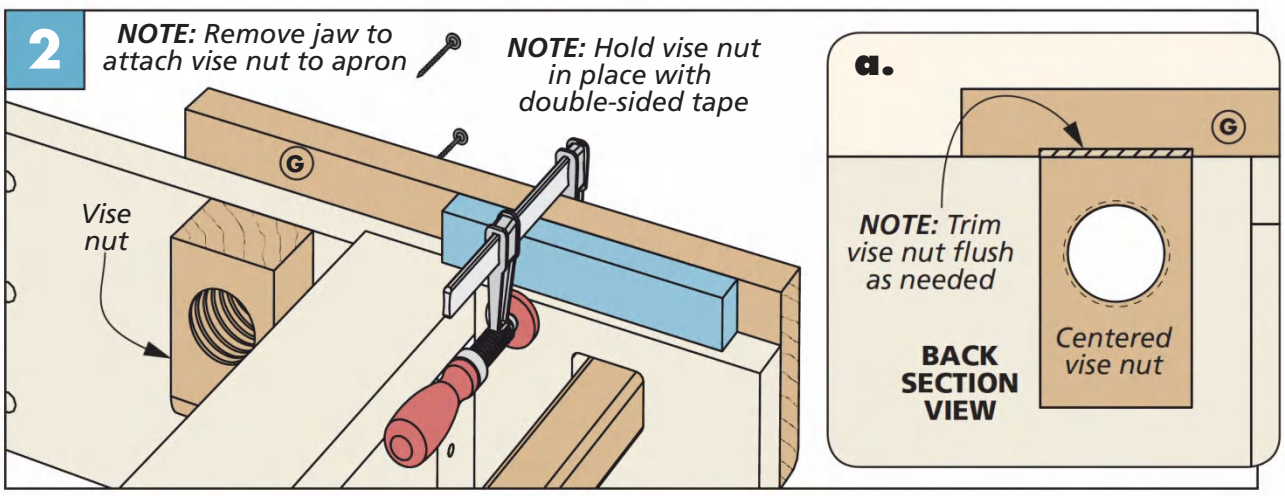

Vise Nut First. Center the vise nut on the opening to see if it needs trimmed. Then hold it in place with double-sided tape, remove the jaw, and screw it to the apron.

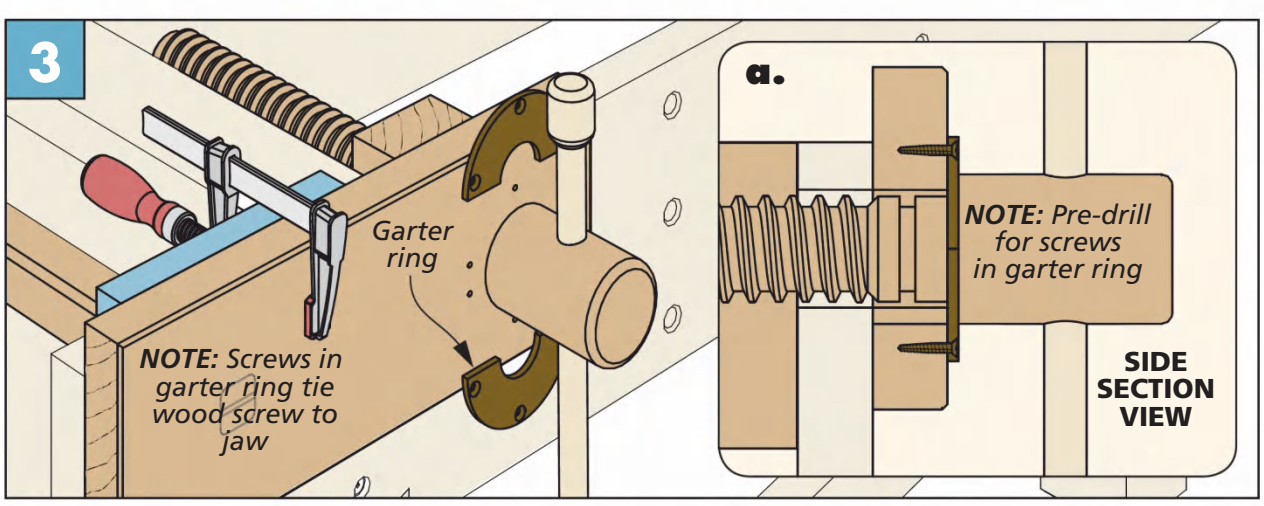

Attach Wood screw. Feed the wood screw through the vise nut and draw it tight to the apron. Mark screw locations through garter ring and drill pilot holes.

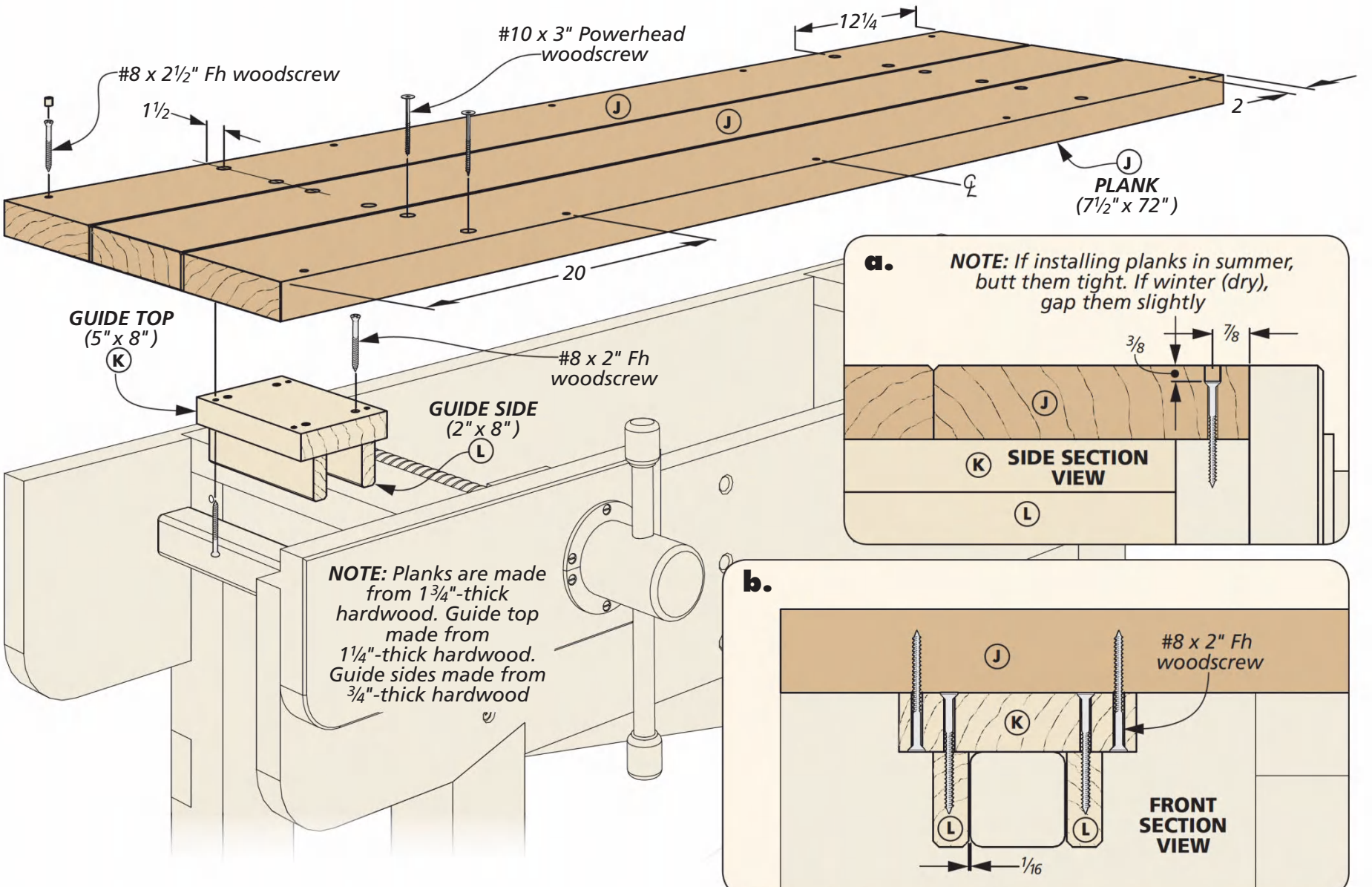

Finish with the TOP

You're in the home stretch on this project. All that's left are the planks for the top, and a guide that screws to the underside of the planks. This three-part guide ensures the parallel guide of the vise operates smoothly.

The planks are all the same size, but the front and back planks have additional holes for fasteners that tie them to the aprons. But before we get to that, sizing the three planks is the first order of business.

PLANKS. As you see in the drawing above, the planks have mounting holes that are drilled in them, identical to the holes used to tie the aprons to the legs. Here, the screws will tie the planks to the plank supports that you screwed to the top of the base. Go ahead and drill these counterbores and pilots now (you'll need outfeed support at the drill press to do this).

Now you can focus on the other holes I mentioned earlier. These counterbores are a little deeper than the previous ones (they're going to be plugged). The box to the left shows you the details. The five screws on either side of the top are closer to the edge of the bench.

These extra fasteners tie the top and apron tightly together. I chose to make the deeper counterbores and plug them for the sake of having a clean, smooth surface along the front edge.

COUNTERBORES & PLUGS

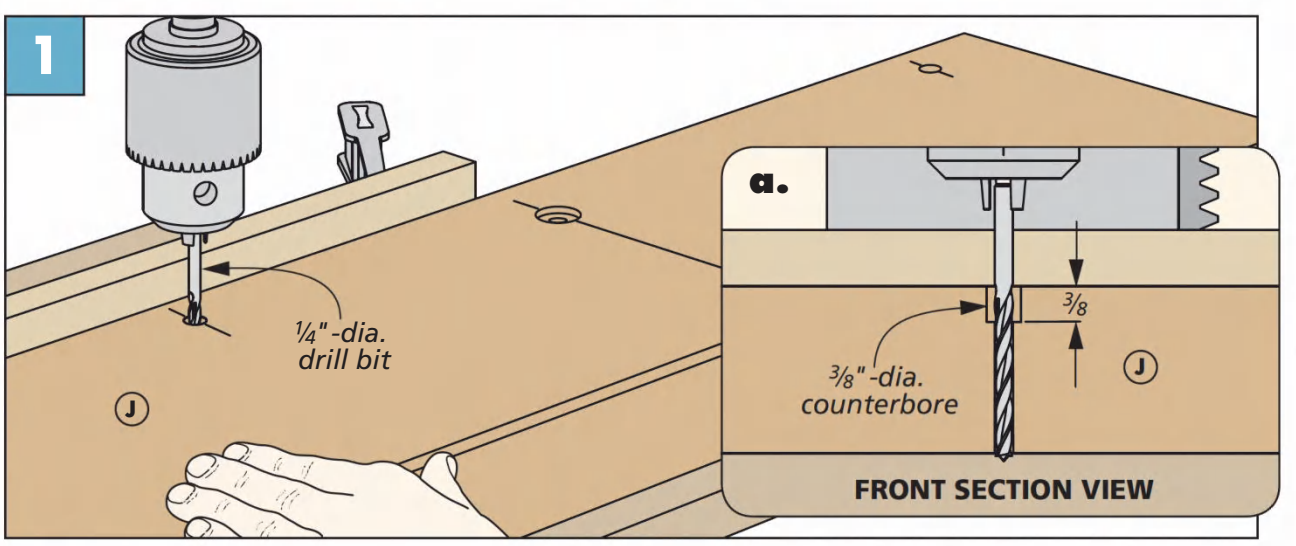

Pilot holes First. As with the earlier work on the aprons, you'll need outfeed support to drill the counterbores and pilot holes on the outer edges of the planks.

EASY DOES IT. Before you screw the planks to the base, note chamfers on their edges. Not all the edges are treated the same though. The front edge of the bench is left crisp, just a light sanding to prevent splinters. The same treatment goes for the ends of all the planks. The remaining long edges get a clean ⅛" chamfer to finish them off. With that, the planks are ready to be attached to the base.

ATTACHING THE TOP. To make the junction of the front apron and the first plank a seamless vertical worksurface, start with the edge screws in the front plank and work your back. You want the front plank to be flush with the front of the apron, not protruding at all.

GUIDE MOUNTING PLATE. The guide mounting plate is a modest component to the bench. It's hidden away on the underside of the front plank quietly doing its job of making the vise behave. Once it's screwed in place you've built yourself a fine bench that's going to give you decades of solid service.

FINISH. To give the surface some tooth it was only sanded to 100 grit. Then oiled with butcher block oil. Penetrating oil followed by paste wax made operating the vise a joy. W

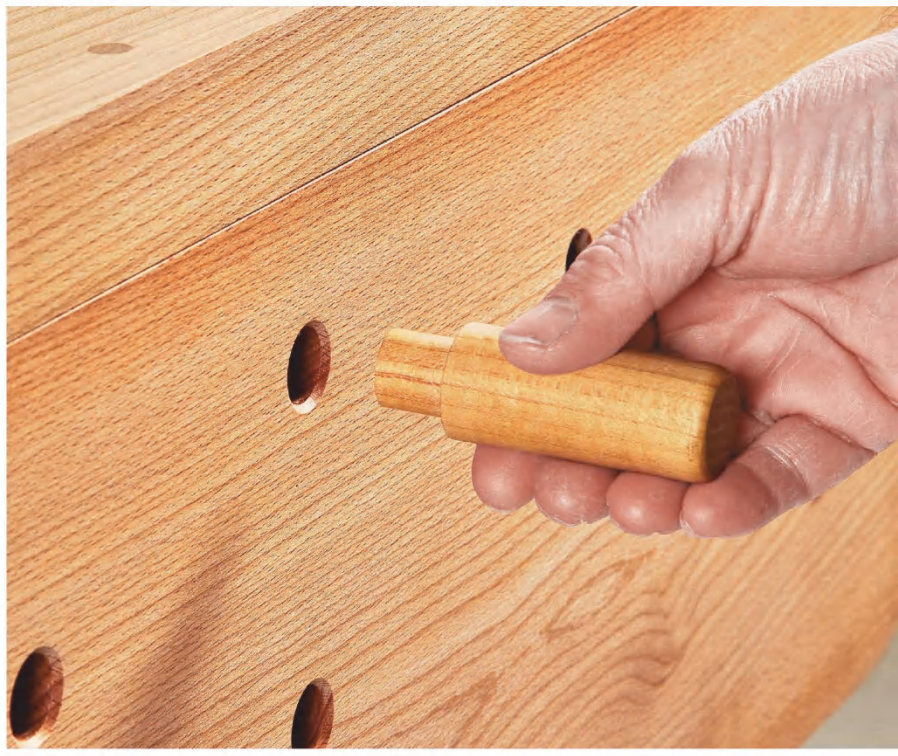

▲ The holes in the apron provide you with many ways to hold your workpieces. From jigs, holdfasts, to the simple peg you see here, they're all ready to give you a hand.

Materials, Supplies & Cutting Diagram

A	Legs (4)	4½ x 4½ - 29½	**G**	Jaw (1)	1¾ x 8 - 22
B	Short Stretchers (4)	2½ x 4 - 18½	**H**	Parallel Guide (1)	2 x 2 - 17
C	Long Stretchers (2)	1¾ x 3 7/16 - 53 7/16	**I**	Wedge (1)	¼ x 1½ - 2
D	Pegs (16)	⅜ x ⅜ - 3	**J**	Top Planks (3)	1¾ - 7½ x 72
E	Aprons (2)	1¾ - 11½ x 72	**K**	Guide Top (1)	1¼ x 5 - 8
F	Plank Supports (2)	1¾ x 4½ - 20¾	**L**	Guide Sides (2)	¾ x 2 - 8

- (22) #10 x 3" Powerhead Woodscrews
- (16) #8 x 2½" Fh Woodscrews
- (8) #8 x 2" Fh Woodscrews
- (1) Premium Wood Screw Vise Kit
- (1) ⅜"-dia. x 36" Dowel

1¾" x 4½" - 84" Southern Yellow Pine (Two Boards @ 5.3 Bd. Ft. Each)

1¾" x 5" - 96" Southern Yellow Pine (Four Boards @ 6.7 Bd. Ft. Each)

1¾" x 5½" - 84" Southern Yellow Pine (Two Boards @ 6.4 Bd. Ft. Each)

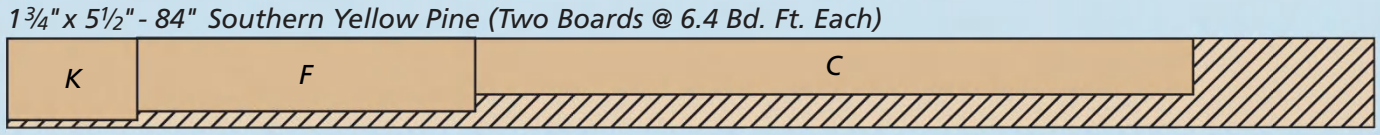

1¾" x 6" - 96" Beech (Two Boards @ 8.0 Bd. Ft. Each)

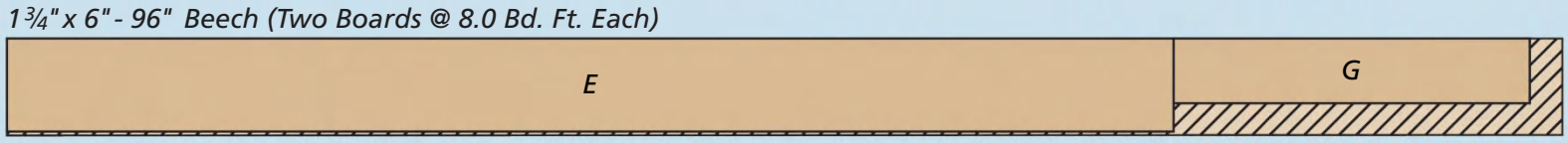

1¾" x 6" - 96" Beech (Two Boards @ 8.0 Bd. Ft. Each)

1¾" x 8" - 84" Beech (Three Boards @ 9.3 Bd. Ft. Each)

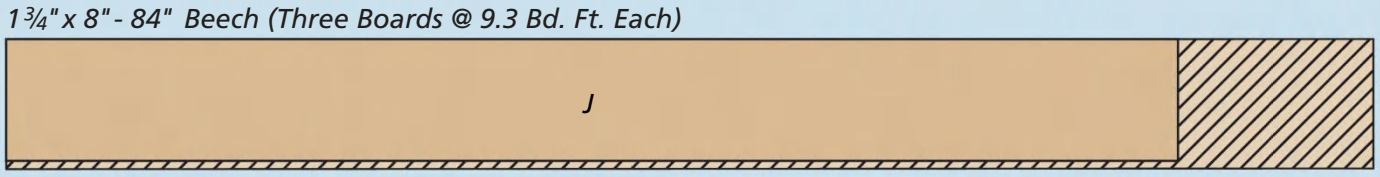

Easy Plywood Boat

Spending a lazy summer afternoon rowing around, fishing in a boat that you built are the things dreams are made of.

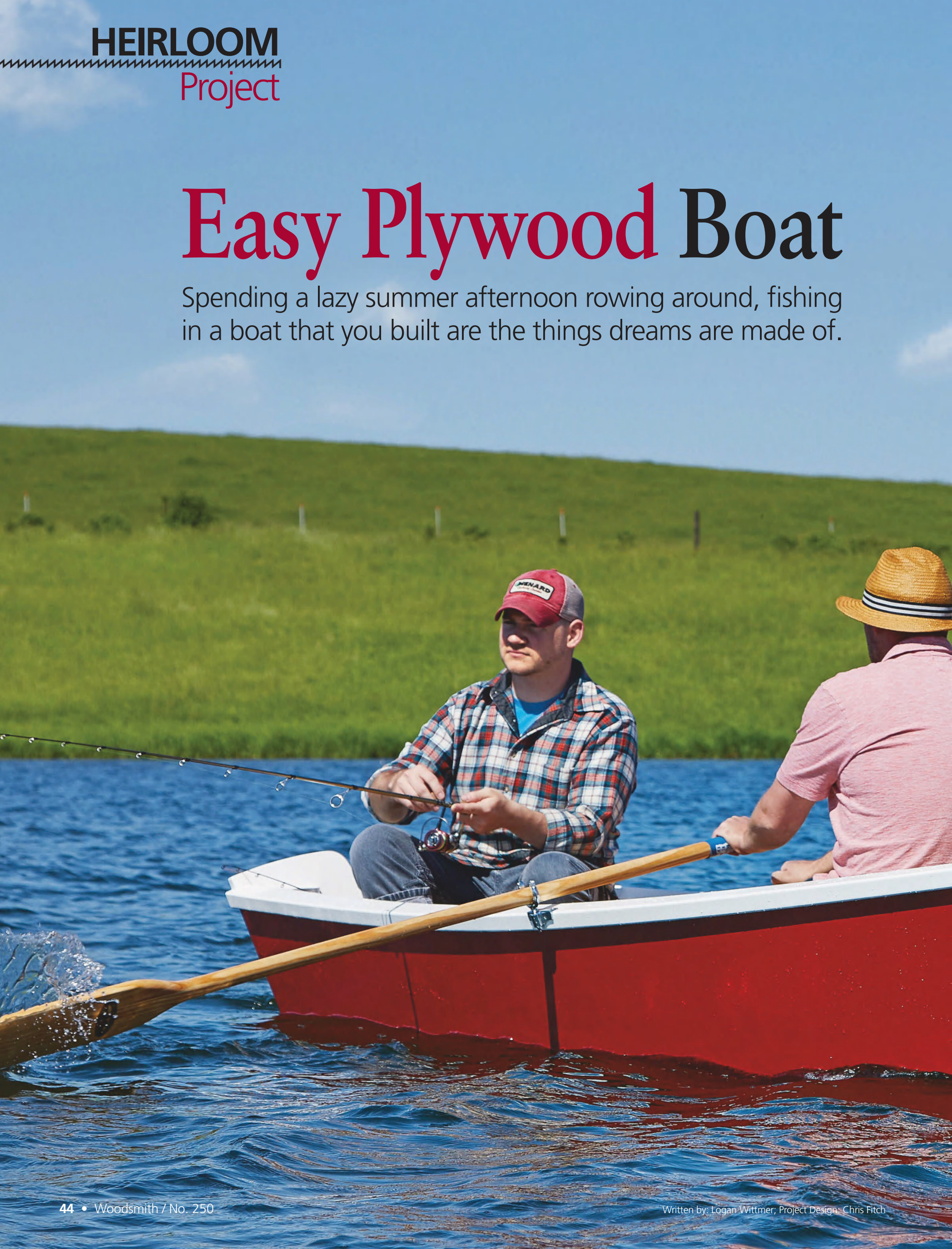

Written by: Logan Wittmer; Project Design: Chris Fitch

Living in the middle of Iowa, you wouldn't expect boats to be a big part of my youth. But in this sea of corn, I grew up fishing on the Mississippi almost every weekend (thanks grandpa). During the weekdays, we would be hitting the water in our ski boat after my dad got off work. Even today, we spend every weekend in our family pontoon boat.

Having always been around boats, it's been a dream of mine to build a center-console fishing boat. Something in the 27-foot range that can handle off-shore fishing in my retirement years. Now, that's a long ways off. So, in the meantime, the boat shown here is a good way to test the waters (pun intended) of boat building.

PLYWOOD CONSTRUCTION. In the world of wood boats, there are a few ways to build them. The method we chose for ours is a plywood construction, coated in epoxy resin (to water-proof it). It's actually pretty straightforward, but there are some angles to tackle. By not applying fiberglass, you remove one of the tedious steps of boat building. What you're left with is a 14-foot flat bottom boat that's perfect for exploring small lakes, rivers, and ponds.

▲ The boat can be powered with either a set of oars (oar locks pictured in top picture), or with a small trolling motor (lower photo). The trolling motor mounts directly to the transom and the battery is stored inside the boat behind the seat.

Illustrator: Dirk Ver Steeg

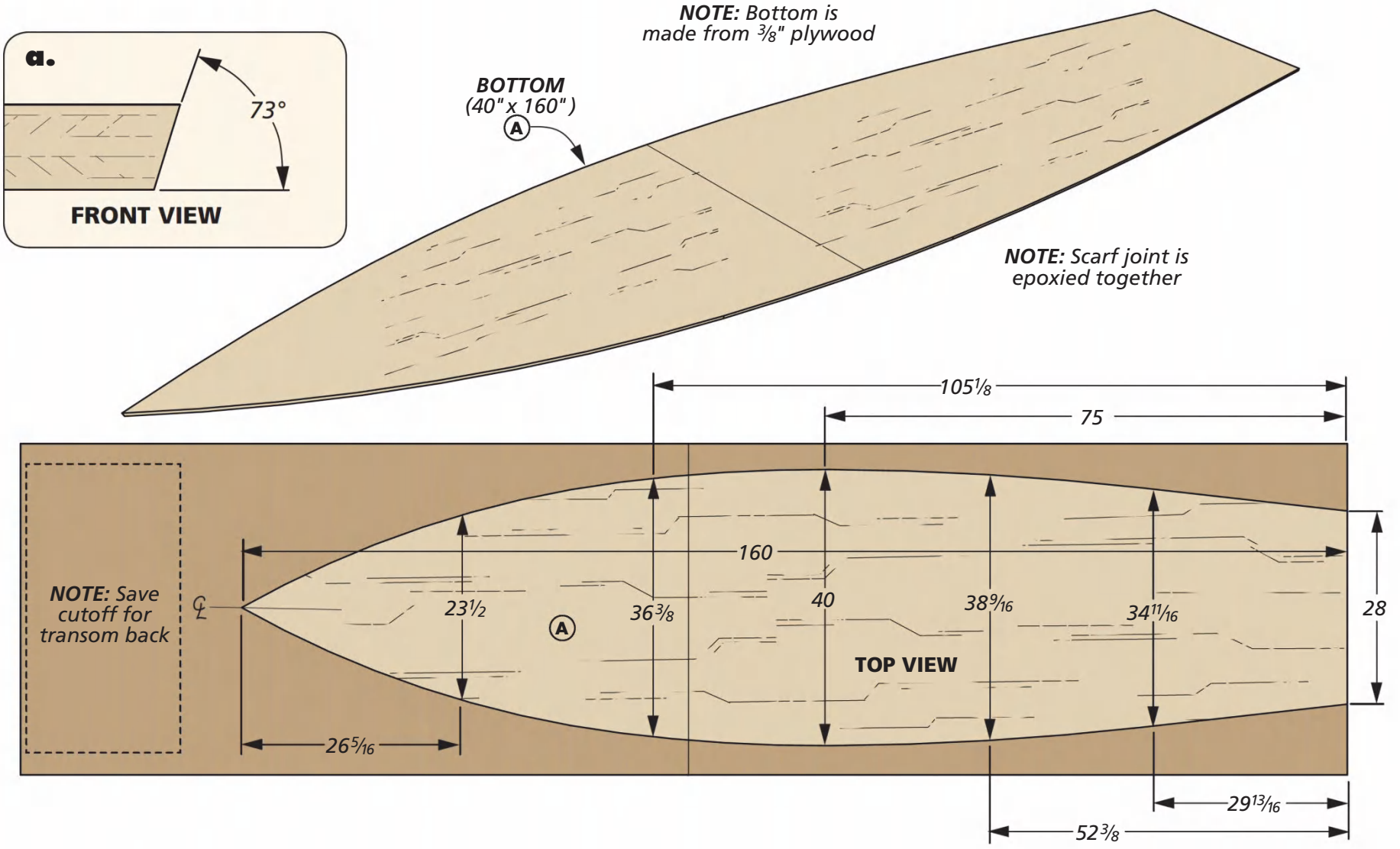

Start with the TABLE & BOTTOM

GO 2 Online Extras

For details on the scarf joint jig, go to:

Woodsmith.com/250

Before we get started, there are a few things I need to point out. First off, the boat is fairly large. You'll need space to work and maneuver around the 14-foot boat as you build it. We used a couple of sheets of ¾" MDF as a sacrificial workbench (just make sure the worksurface is flat). Second, you'll have the flip the boat around, so it will be useful to have a helper on call for some of the awkward (but not heavy) lifting.

SCARF JOINTS FIRST. The boat construction starts off by making two sheets of plywood into one long piece. This is done by a traditional boat building joint called a scarf joint. It's nothing more than long bevels cut on the workpieces and then epoxied together (details '1a' and '1b').

After you've created the scarf joint, you'll glue up two 8-foot sheets of plywood into a 16-foot one — one sheet for the bottom and another that will become the sides later. Start by squaring up the ends of a sheet of plywood using a circular saw and a straightedge. Then, use a scarf joint jig (available at *woodsmith.com/250*) and a router to cut the bevel. I used a large spoil-board milling bit for this.

EPOXY THE JOINT. With bevels cut on four sheets of plywood, set two aside for later and glue two of them together. To do this, mix up some two-part epoxy (see sources for the brand I ordered). When epoxying the joint, you'll want to first coat the joint with thin epoxy to seal it (let it cure). Then, you can mix filler into the epoxy and "glue" the scarf together referencing one edge of the plywood off your MDF

CUTTING A SCARF JOINT

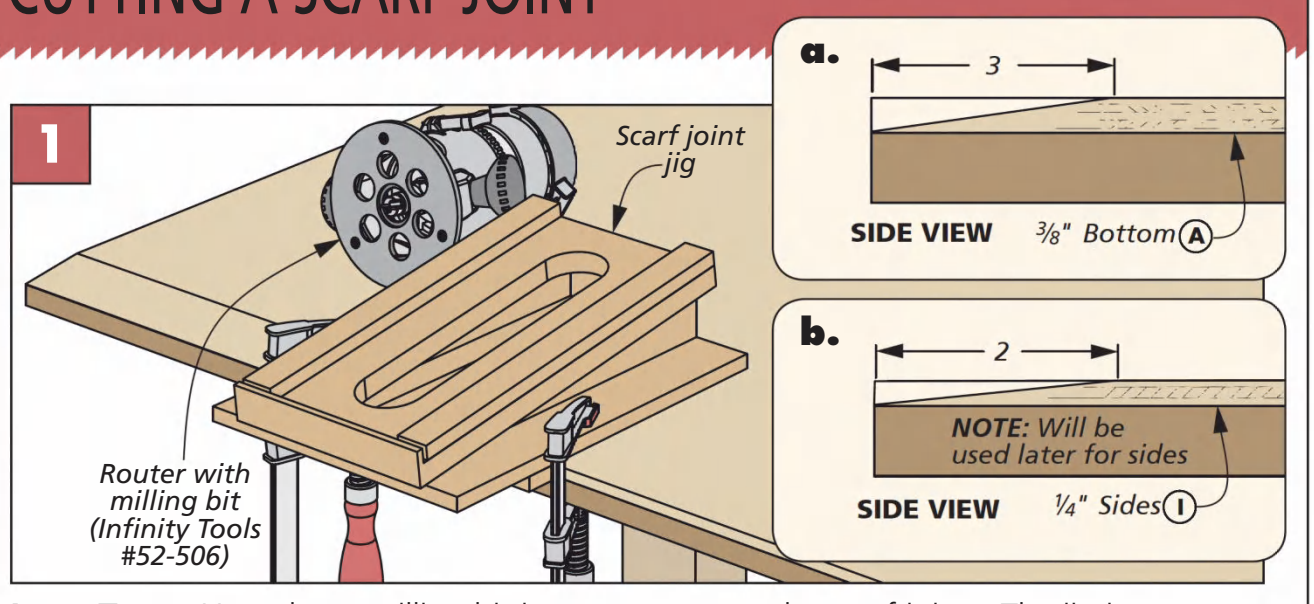

Long Taper. Use a large milling bit in a router to cut the scarf joints. The jig is basically a ramp that creates the taper as you work your way down the plywood.

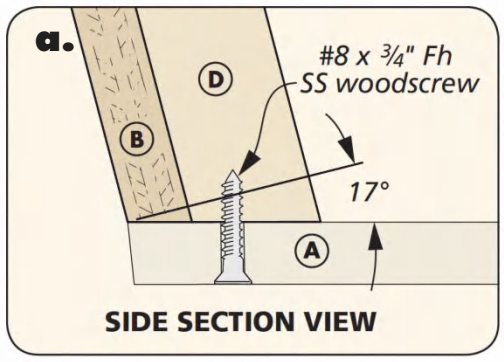

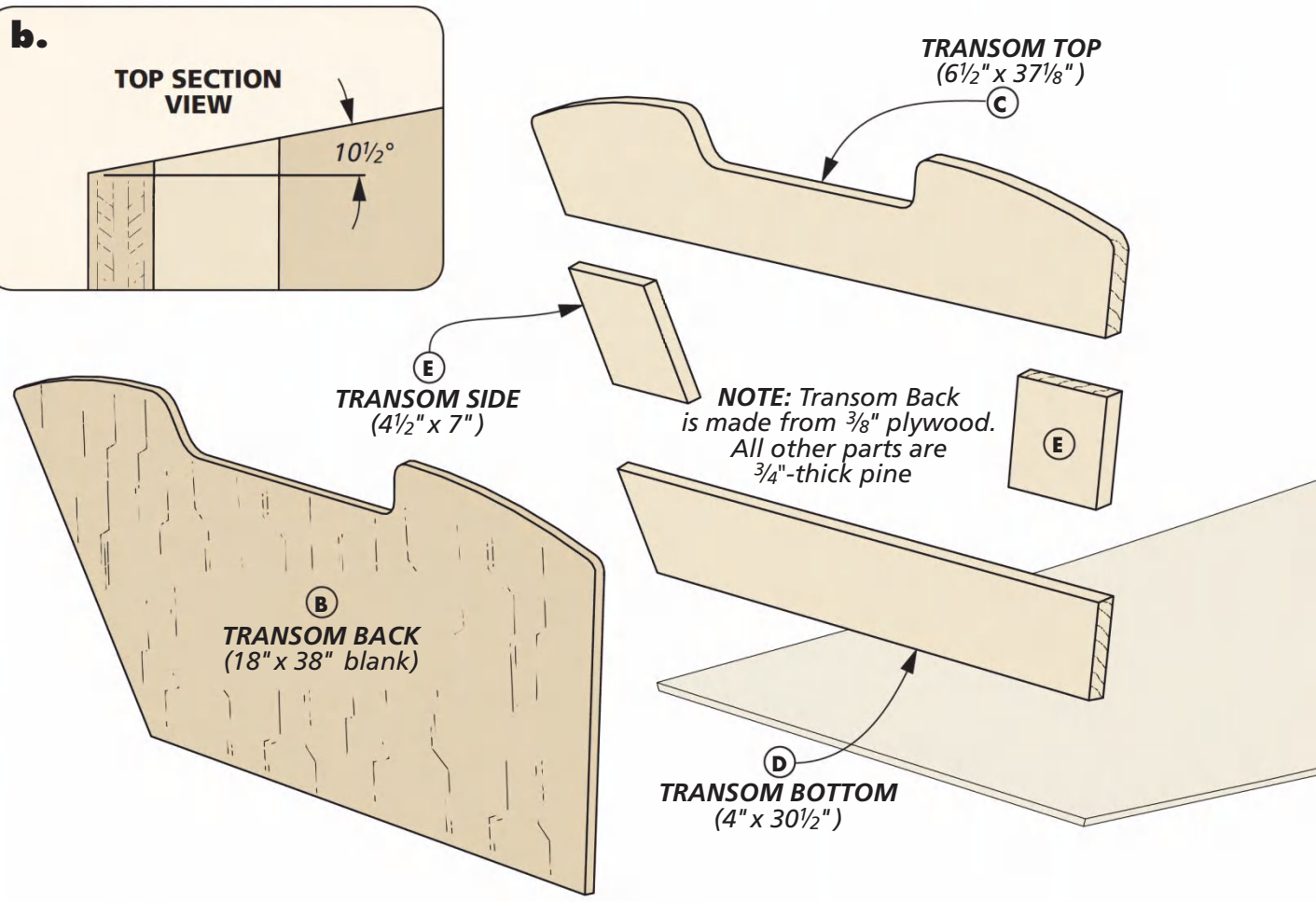

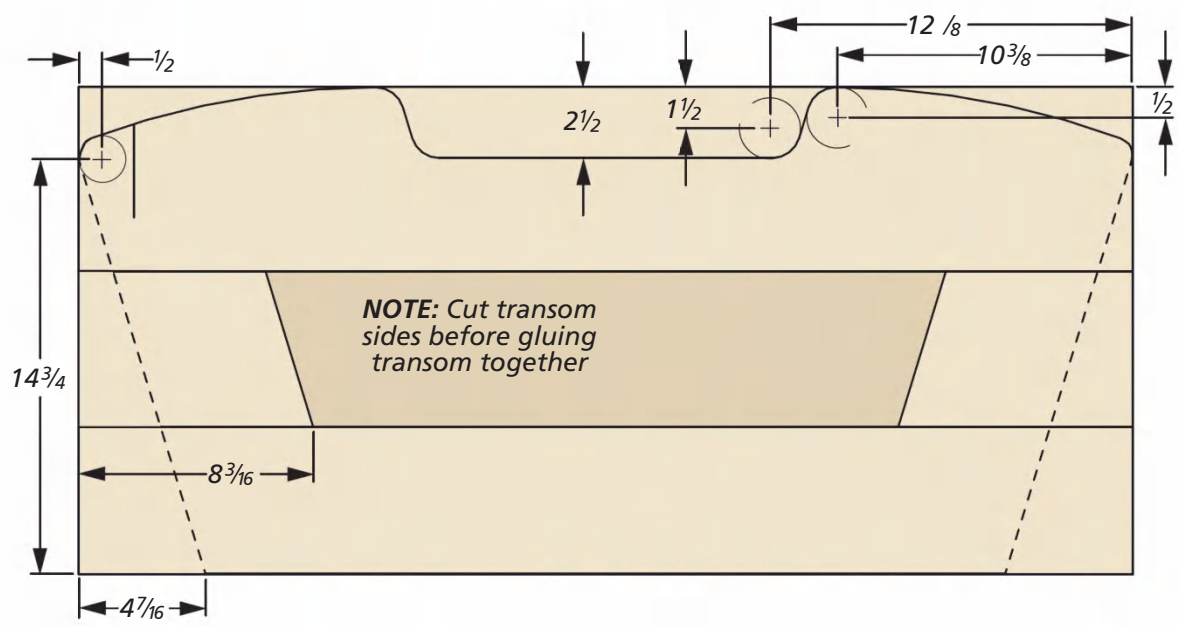

worksurface to make sure the sheets are straight.

Once the epoxy is applied and the sheets are overlapped, lay a scrap board over the joint and screw it through the plywood into the bench. This will act as a clamp to hold the joint together. You can wrap it with plastic wrap or waxed paper to keep it from sticking to the epoxy. And don't worry about the screw holes — those will get plugged and filled later. Now, let the epoxy cure.

CUT TO SHAPE. After you've removed the clamp board, lay out the shape of the bottom using the dimensions on the previous page. Use a flexible strip to help draw in the cut lines. Then, cut it to shape with a jigsaw, making sure to leave about ¼" to ½". You'll trim it down later.

TRANSOM

With the bottom shaped, you can work on the back of the boat (the transom). It's made from plywood with pine blocking.

RECTANGLE BLANK. Start by gluing up the plywood and pine into a rectangular blank. You'll need to make three accurate cuts for the transom. The first, is to bevel the bottom edge at the table saw. Then, use a circular saw with a straight edge to cut the compound angle sides. They're flared up to match the angle of the sides, and also beveled.

The final thing to do on the transom is shape the top profile. Drill out the inside corners and use the band saw to cut the top edge to shape. Attach the transom to the bottom with epoxy and stainless steel screws (detail 'a').

COMPOUND BEVEL THE TRANSOM SIDES

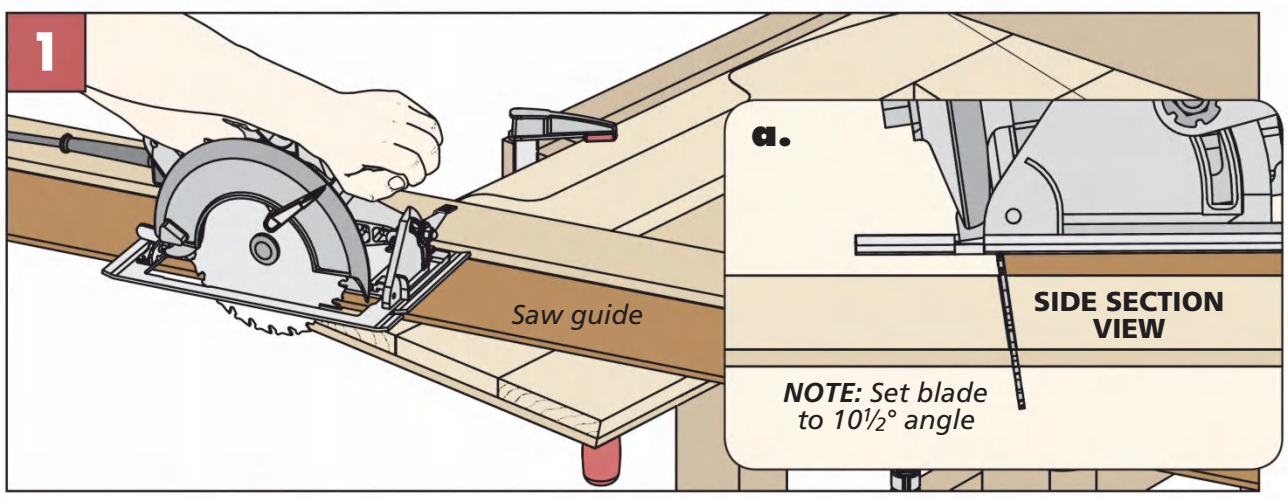

Circular Saw. Set up a straight edge on the transom cut line. Then, tilt the circular saw blade and make the cut, following the straight edge.

Form the STEM & BOTTOM

Up next is to add the stem to the front of the boat. This is where the sides will be attached. Also, we will add some ribbing that will stiffen the bottom.

THE STEM. The stem is made from four layers of pine glued together with epoxy. After the epoxy is cured, bevel the ends with a miter saw and then you can cut the stem to shape.

Cutting the profile of the stem is done at the band saw. You can see this in Figure 1 below. Tilt your band saw table, and make two cuts to form the shape.

Then, the stem can be attached to the bottom using epoxy and screws through the bottom (detail 'a'). A note about the screws. If you plan on leaving the screws in and epoxying over them, I would use stainless steel screws. If you're going to remove them like I did, use normal screws. The holes will get plugged by filling them with epoxy later.

CURVED BOTTOM. Even though this boat has a flat bottom (it's not a v-shaped profile), the bottom does have a shallow curve ("rocker") in it. This way, the front of the boat drafts less water than the middle and rear. This gives it a more stable ride and makes it easier to row. To keep the bottom in this shape, you're going to add a center rib and two outer ribs called chine logs.

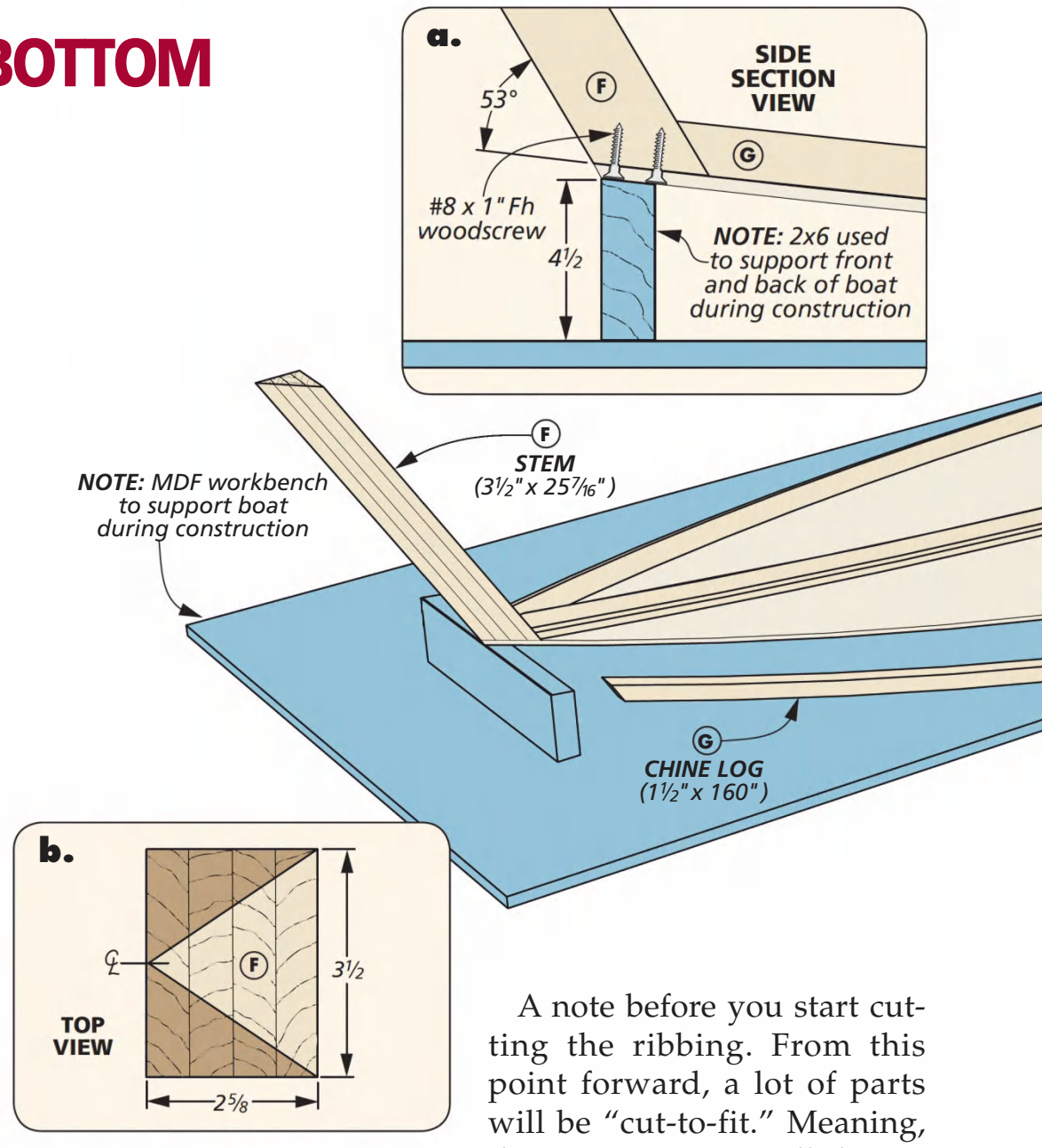

A note before you start cutting the ribbing. From this point forward, a lot of parts will be "cut-to-fit." Meaning, that certain parts will dictate the size of other parts. So take careful measurements and cut the parts to fit your boat.

SIZING CHINE LOGS. The chine logs are first and you'll want a helper to get them fit (or a few dozen clamps to hold it as you fit it). Use a couple of blocks to raise the front and rear of the boat to the height shown (detail 'a'). This will set the curve of the bottom.

The chine logs and the center rib are made from two pieces scarf jointed together. Cut the joint, but don't glue it together. Also, leave the stock a little long so you can sneak up on the fit.

Next, bevel the bottom edge at the table saw, as seen in detail 'd'. You need to cut one end to meet the transom. This will be a compound angle. The transom is tilted back slightly, and the chine log meets the transom at a slight angle. The easiest way I found to get these angles is to use a sliding

BANDSAW TRIANGLE

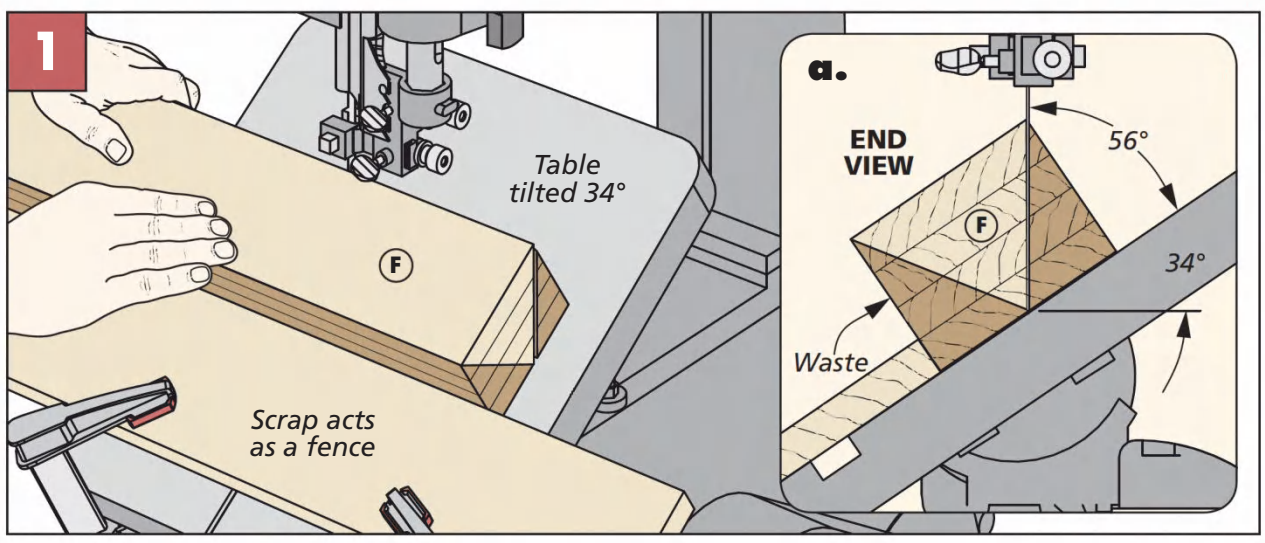

Beveled Rip. Tilt the table of your band saw to form the triangle shape of the stem. Cut one side first, then flip the wokpiece and cut the remaining side.

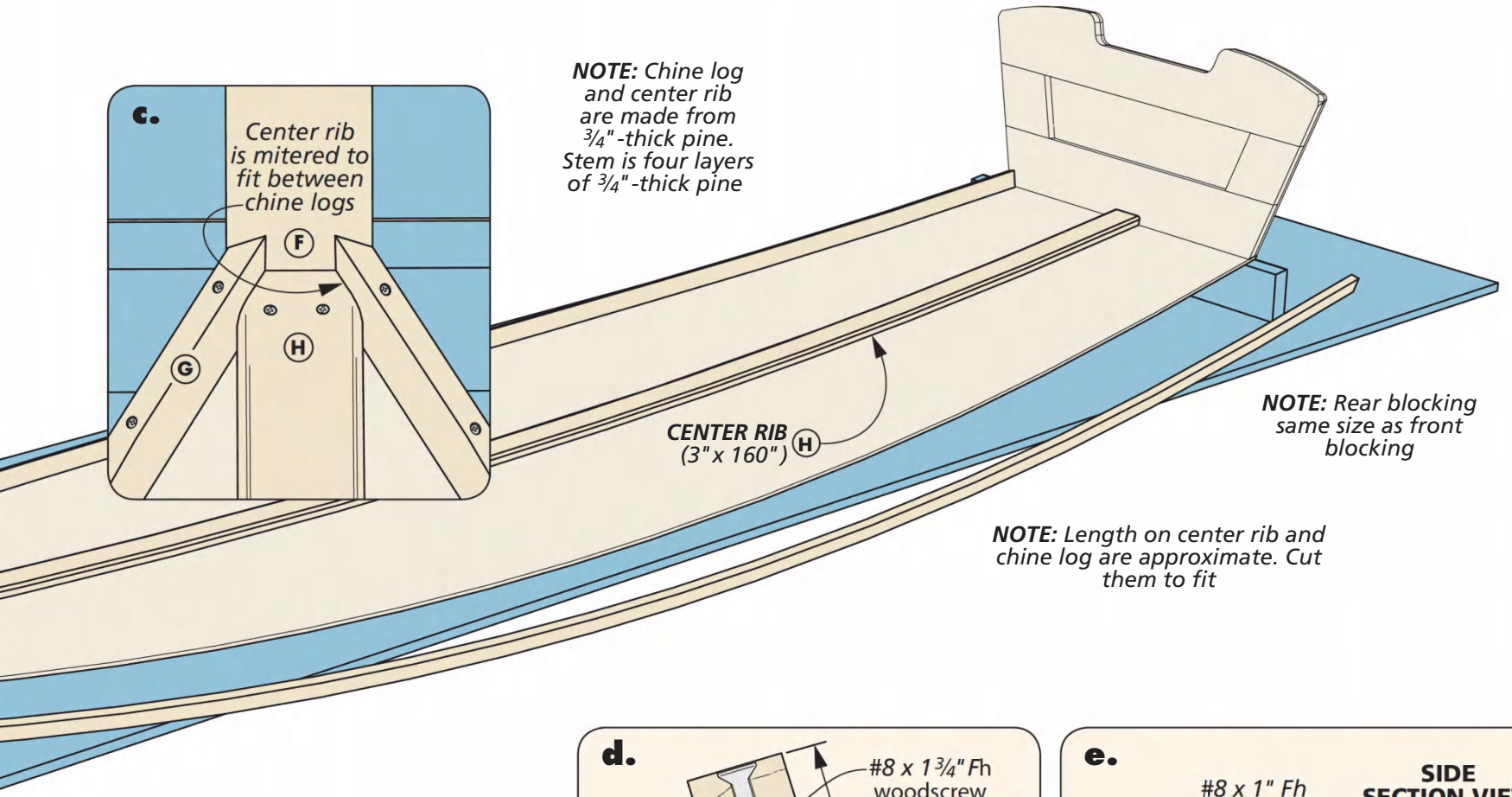

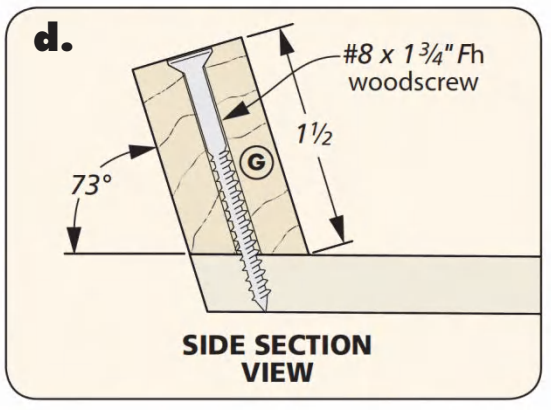

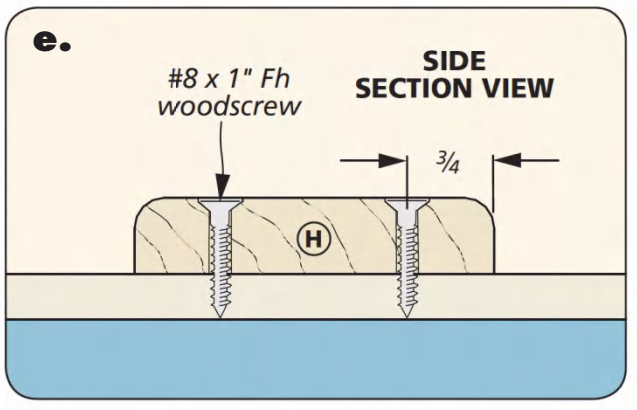

bevel gauge to measure the angle and set the miter saw according to that. You'll use this trick in a few other places on the boat as well. Glue the scarf joint together.

Once the epoxy is cured on the scarf joint, you're going to cut the chine log to meet the stem while matching the curved layout line you drew on the bottom. Remember, the bottom was cut to shape with excess waste. You'll trim the bottom to match the chine log once it's installed.

MAKE THE CUTS. Clamp the chine logs in place against the transom and bend them to the stem. Mark where the chine logs meet the stem, cut them, and test the fit. This will be another "sneak up on it" type of operation. Once they slip in place, you can apply a handful of clamps along the edges and predrill them. Then, epoxy the chine logs in place and hold them with screws.

CENTER RIB. The center rib is next. Again, make it from one piece or scarf joint a few together. The ends are beveled to sit tight between the stem and the transom. The front will also need to be mitered to fit between the chine logs (detail 'c'). When you're happy with how it fits, round over the top edges. Then, epoxy it in place and hold it there with screws.

BRACING. Starting now, you're going to start to move the boat around a bit. So you'll want to add bracing to keep everything rigid. I suggest screwing a brace from the stem and transom to the center of rib. Then, add one horizontal cross brace between the stem and transom braces. These can be just pieces of plywood or some 2-by material, just to stiffen it up. You can see how I laid out and positioned my bracing in Figure 1 to the left. The bracing can be removed after adding the sides and gunwhales later.

TEMPORARY BRACING

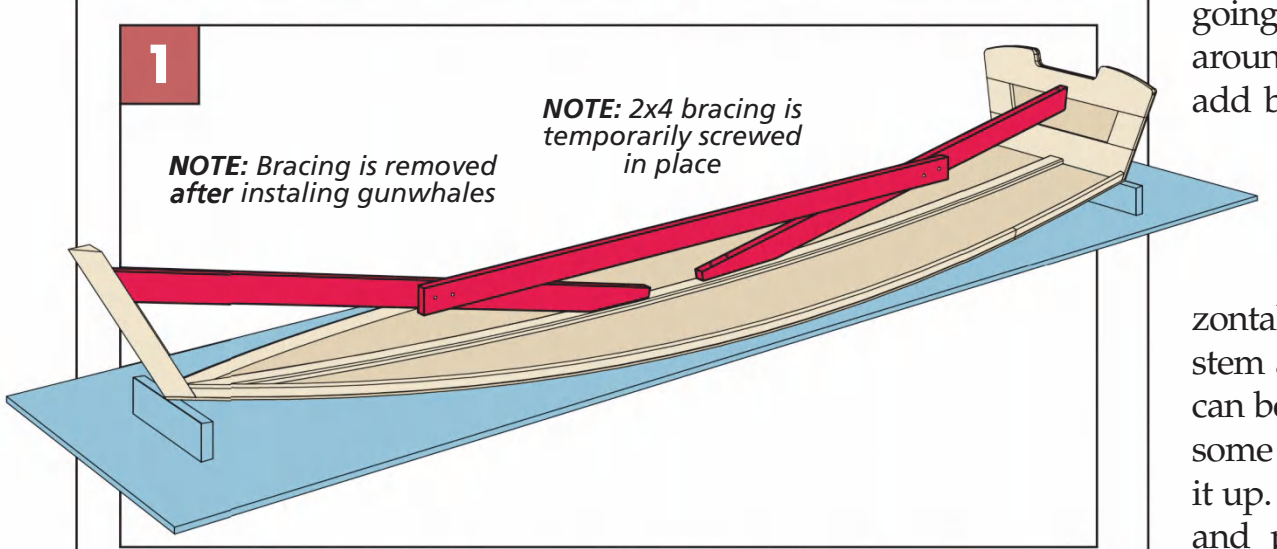

Scrap Bracing. After attaching the stem, transom and ribbing, add some temporary bracing by screwing it in place.

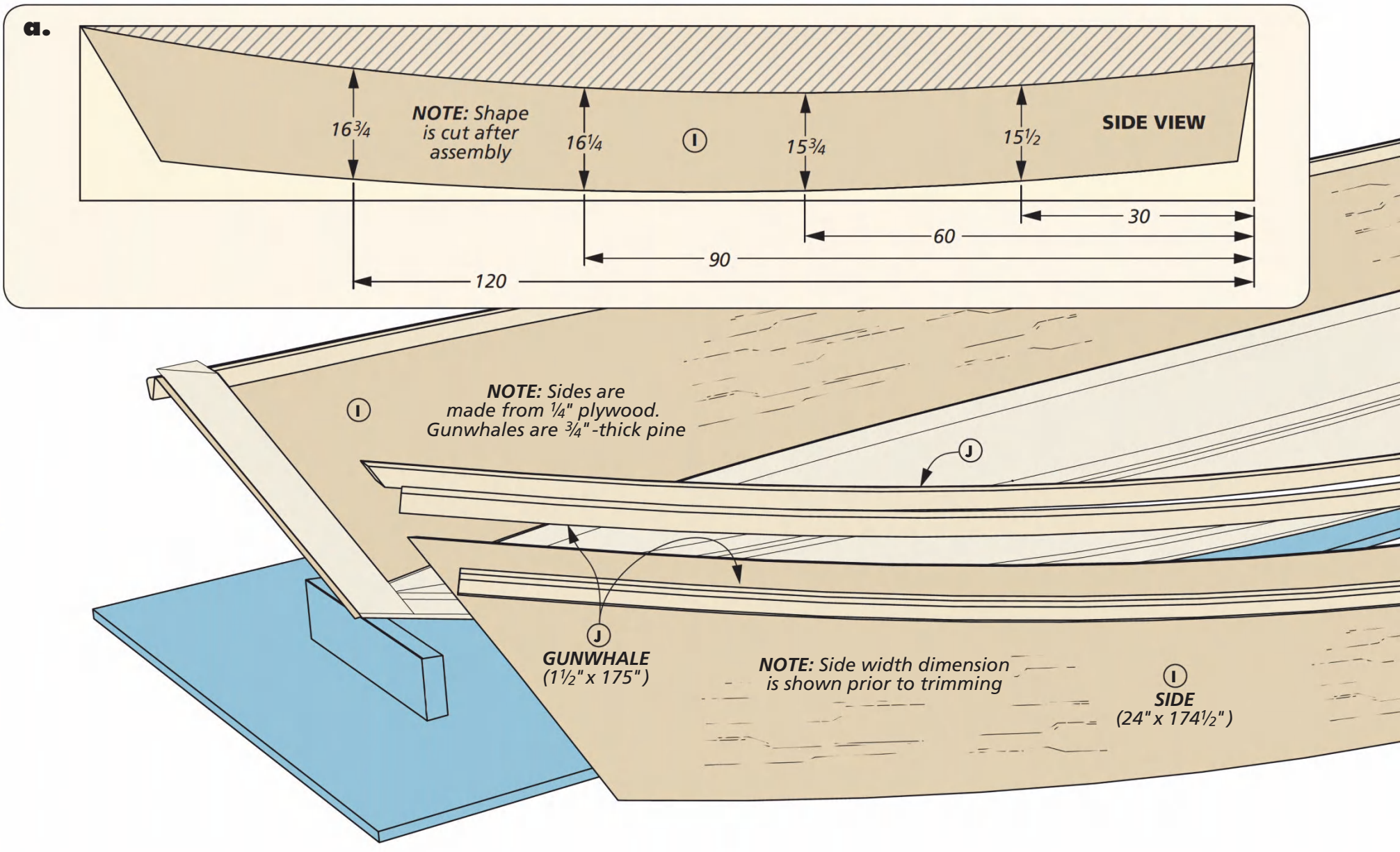

Make it a boat with **SIDES**

Adding the sides next will really make this thing look like a boat. To do this, we'll use the same technique of scarf jointing plywood that you used earlier. But first, we need to trim the bottom flush with the chine log.

CUT IT FLUSH. Normally, when there's something to flush trim, such as the bottom to the chine log, I would reach for my router. And you could do that, but the angle of the chine log would require an angled base on the router. Instead of fussing with that, our shop craftsman Marc used an oscillating cutoff tool.

The oscillating tools with a rounded cutter makes trimming the plywood easy. Follow the chine log and trim the plywood down. Any lumps or bumps that are left can be taken care of quickly with some sanding. Or for a more aggressive cut, use a rasp.

LONG SHEETS. With your long, plywood sheet epoxied and ready to go, rip it down to two 2'x16' sheets. These will be long and floppy, so recruit a helper to have on hand for the next couple of steps.

The plywood gets epoxied to the stem, transom, and the chine log. This will happen one side at a time, and you could dry fit this in place if you want. But there's nothing really stopping you from applying epoxy and screwing it in place right away. You'll cut it to shape after it's attached. Just make sure you have a little bit of extra on the lowest point of the bottom.

TRIM IT UP. To trim the sides, start along the bottom edge. If you can, flip the boat over. This will make it easier to trim the side flush with the bottom. The same oscillating tool is used here. Just follow the curve of the bottom, then sand any remaining bumps smooth.

Now, flip the boat back over and trim the front of the side to the front of the stem, and the back flush with the transom. Lay out the top profile of the side. To do this, use a tape measure to follow the curve of the side and lay out the marks shown above. Then, use a flexible straight edge to draw the profile in. Don't cut it yet however. You'll want to attach the gunwhales first, then trim the sides to match the gunwhales.

GUNWHALE

The gunwhale (or gunnel) is the wider, upper wood edge of the sides of a boat. Ours here is made out of three layers of pine. It stiffens the top of the sides and makes it more comfortable to hold onto and provides a mounting point for accessories like rope cleats or fishing rod holders.

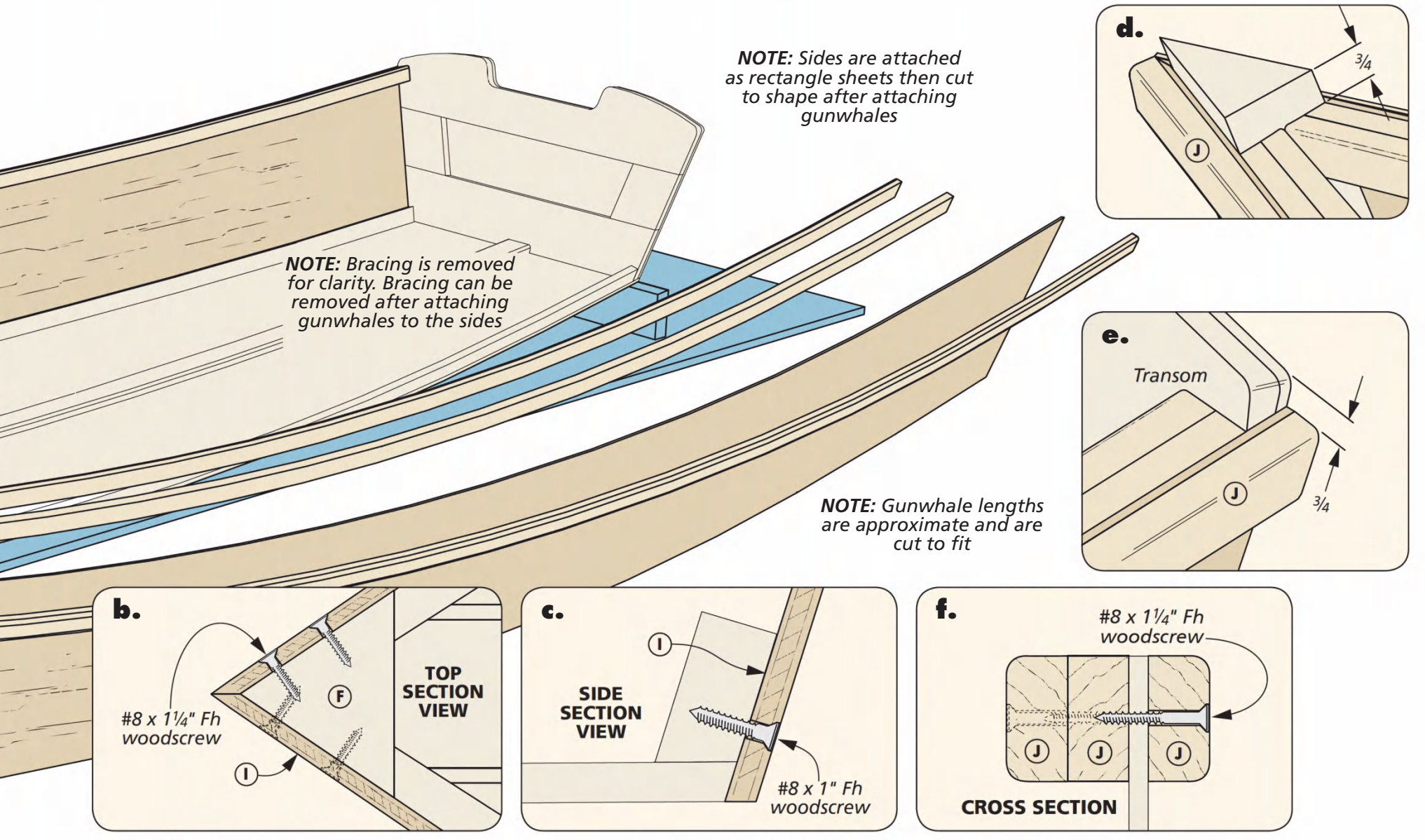

OUTSIDE FIRST. Start by tackling the outside gunwhale. Again, this is long pine so scarf joint a couple of pieces together to get the length needed. Then, attach it to the side following the layout line you drew previously. Epoxy and screws (from the inside) will take care of holding it on. After it's attached, you can trim the side. Use a thin spacer (like hardboard) under the oscillating tool cutter. This will leave the side a little proud of the gunwhale and allow the side to be sanded down flush later.

TRIM THE SIDES

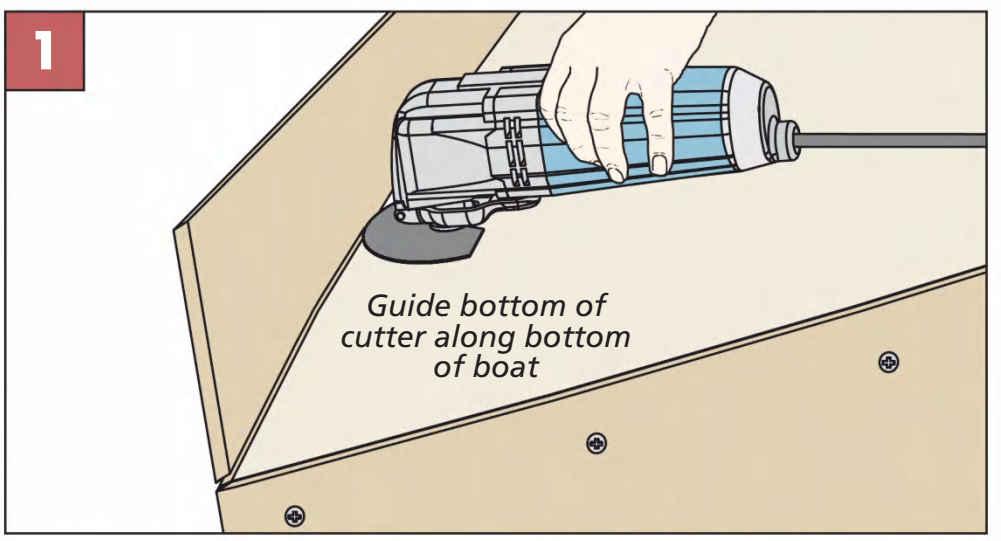

Flush Trimmer. An oscillating tool is the preferred way to flush trim items on the boat. Use it to first trim the bottom flush to the chine logs. Then, use it to trim the sides flush with the bottom.

INNER GUNWHALES. Now you can add the inner gunwhales. These are epoxied and clamped in place. You have some angles to contend with here — mainly where the gunwhale meets the transom and the stem. Use a bevel gauge to set the angle and miter the ends. Epoxy and clamp them in place.

TRIMMING THE SIDES. Now, you can trim the side down flush with the top of the gunwhale. A belt sander will bring it down quickly, as will a router with a flush trim bit. If you use a router, use the router on edge, with the base following the outside of the gunwhale. Smooth everything out with a little sanding with an orbital sander. To round over the edges of the gunwhale, use a roundover bit in a router to round over the top and bottom of the outer and inner gunwhales. With the gunwhales installed, you can remove all of the extra bracing you added to the inside.

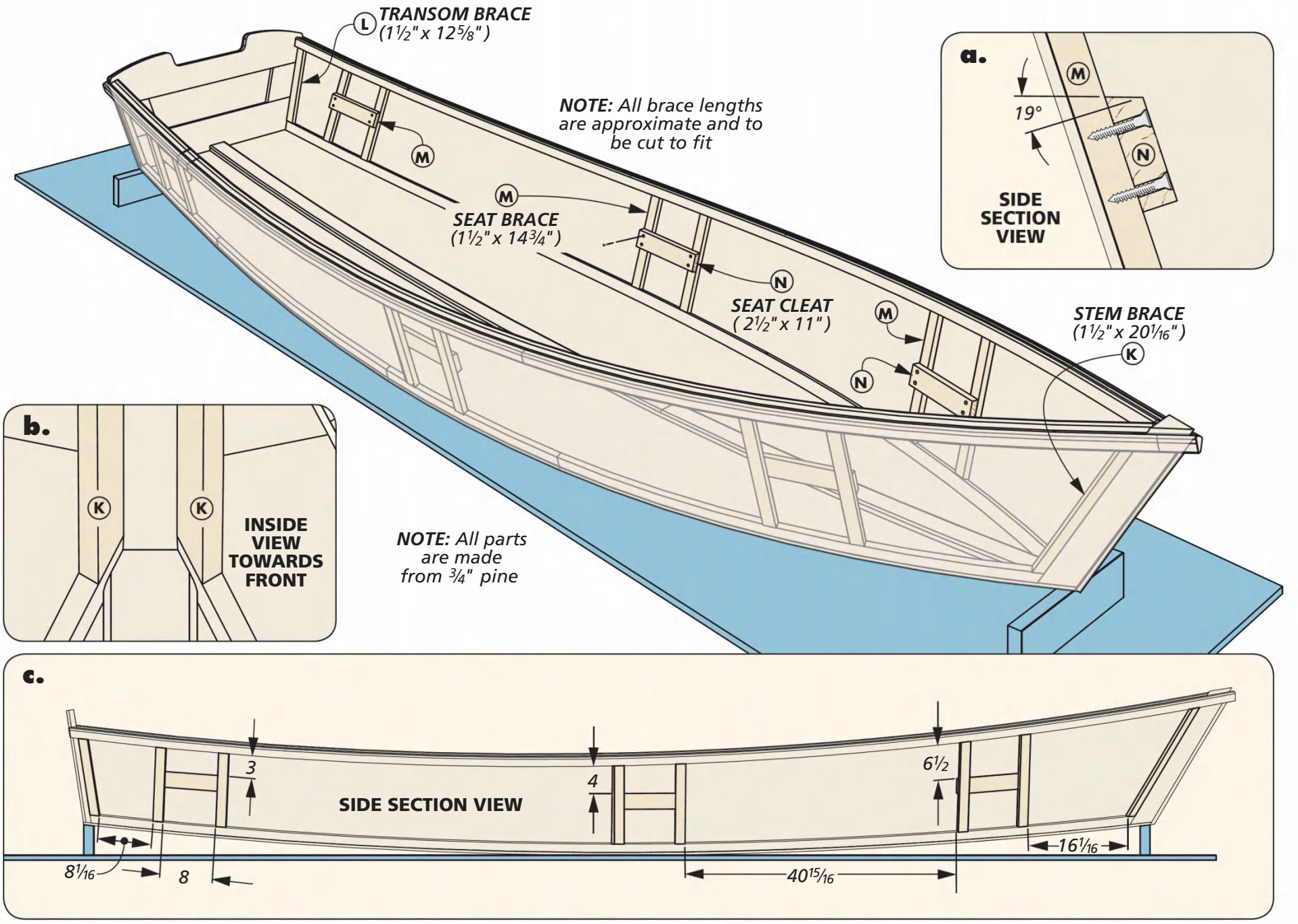

Attaching the **BRACES & SEATS**

At this point you have something that, amazingly, resembles a boat. And while I've owned many boats without seats, it's much more comfortable to sit on something other than a 5 gallon bucket. So seats are up next.

BRACING FIRST. There are three sets of bracing for the three bench seats that get added. There's also additional bracing that's added near the stem and along the transom (main illustration above). These are all pine and cut to fit. Again, use a bevel gauge to find the correct angle between the gunwhale, stem, transom, and the chine log.

Make some careful measurements and cut the bracing to fit between the guntwhale and chine log. Position them by measuring from the stem or transom and epoxy them in place. If you have long reach clamps, you can clamp them in place. Otherwise, screws will work as well.

SCREW HOLES. I decided that this was as good of a time as any to start to tackle the screw holes all over the boat. Anywhere I drove a screw and had removed it, there was a hole to fill. To do this, I mixed up some thick epoxy (using an epoxy thickening additive — see sources on page 67) and started filling the holes.

The holes are deeper than they look, and often times it will take multiple epoxy applications to get them level with the surface. After the epoxy has cured, it's pretty easy to sand down the holes before applying epoxy over the entire boat (more on that in a bit).

SEAT CLEATS NEXT. The trick with creating the boat seats was to have them easy to remove as needed. I wanted to be able to remove them for painting and cleaning, but have them secure. The solution came in two parts. The first is a pair of cleats screwed to the bracing that you just installed. You can see this in the main drawing above and details 'a' and 'b.' This sets the height of the seat.

A hint here — the rule of thumb is that the lower the seat, the more stable the boat will be. The higher the seat is, the wider the bench becomes.

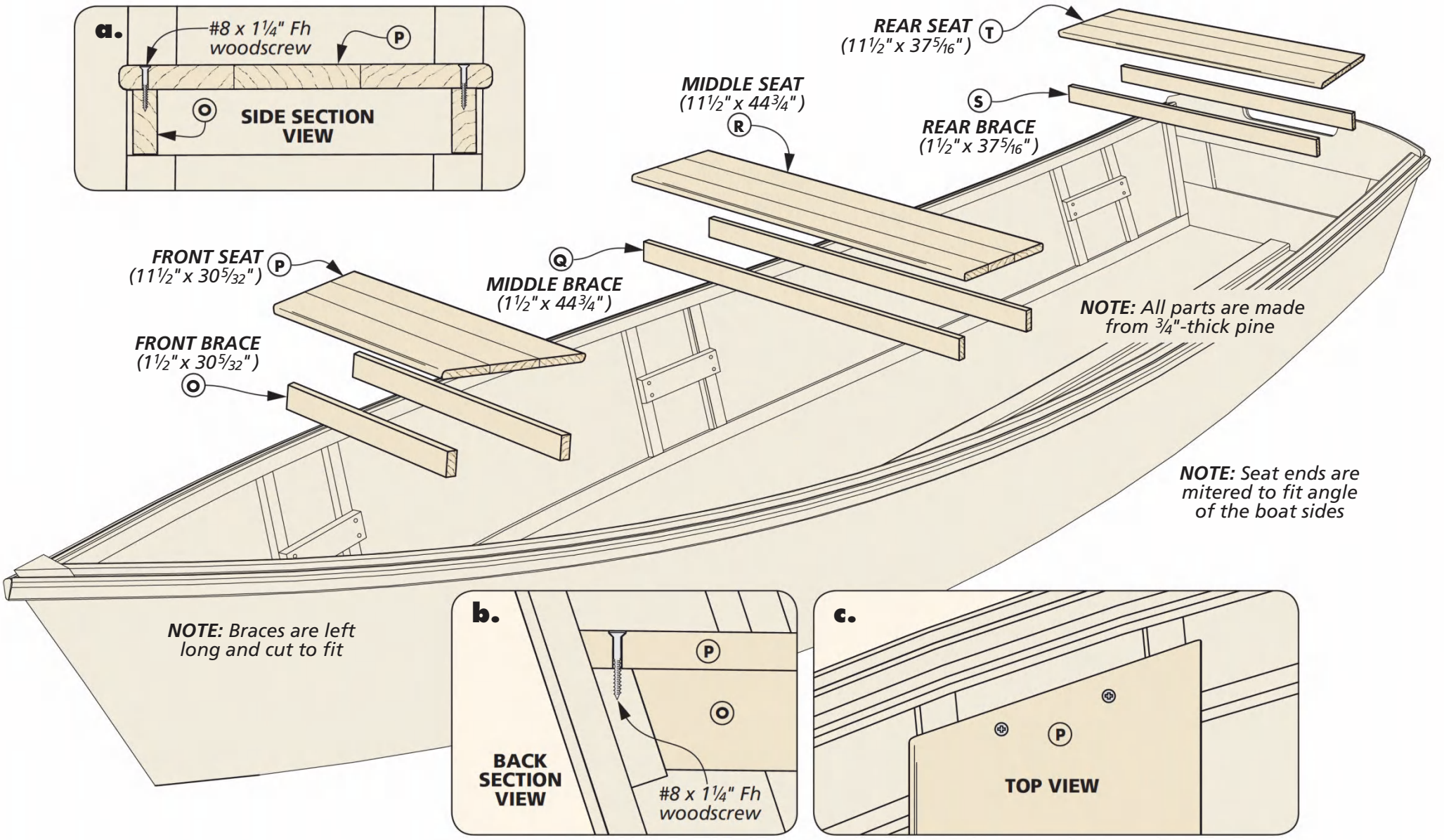

THE BENCHES

The second part of the seating conundrum is the three drop-in benches. They're all built the same way. The benches are pine and are glued up to width. A pair of braces are attached to the bottom side of each bench. The braces stiffen the bench so it won't sag. There are a couple of tricks to cutting all of these.

COMPOUND ANGLES. The first, is that the end of the bench and braces are compound angles (detail 'b'). The sides of the boat are flared as well as tapered from front to back. The braces are easy to cut. A miter saw can handle both angles at the same time (set the angle with your bevel gauge again). If you have a large miter saw, you might even be able to cut the seat as well. Otherwise, use the same setup that we did on the transom — a tilted circular saw with a straight edge guide.

MEASURE THRICE CUT ONCE. The second trick is that you'll want to carefully measure the width of each seat. Little variances as you build can cause the seats to be slightly longer or shorter than the stated dimensions. So, to ensure a good fit, measure a couple of times before making your cuts.

ASSEMBLY. The seat is epoxied and screwed to the braces and then drops in place over the cleats that we added inside the boat. You can screw these in place (detail 'c').

A ROUNDOVER FOR THE SEATS

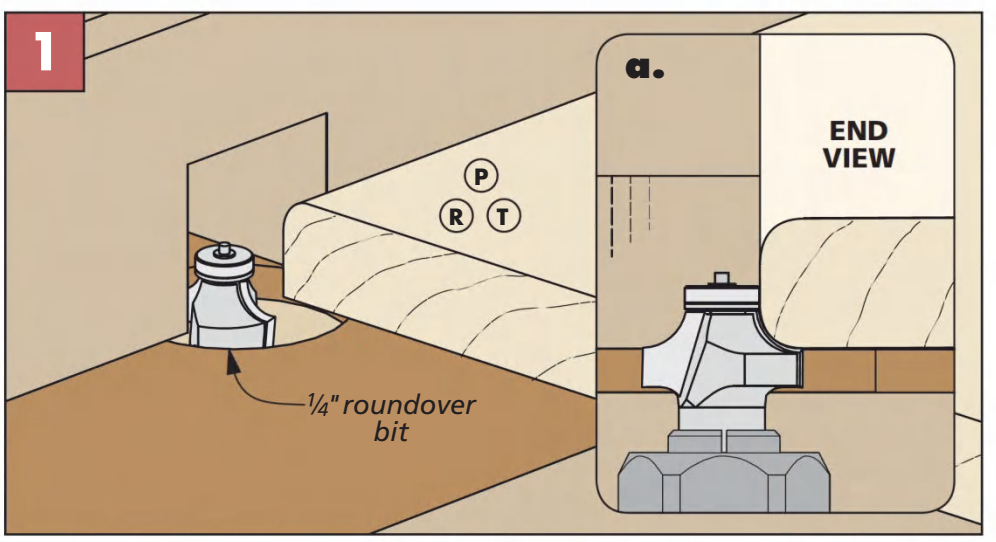

Eased Edges. At the router table, use a roundover bit to round over the front and back edges of the seat. Set the fence so that the bit bearing is flush with the front edge of the fence.

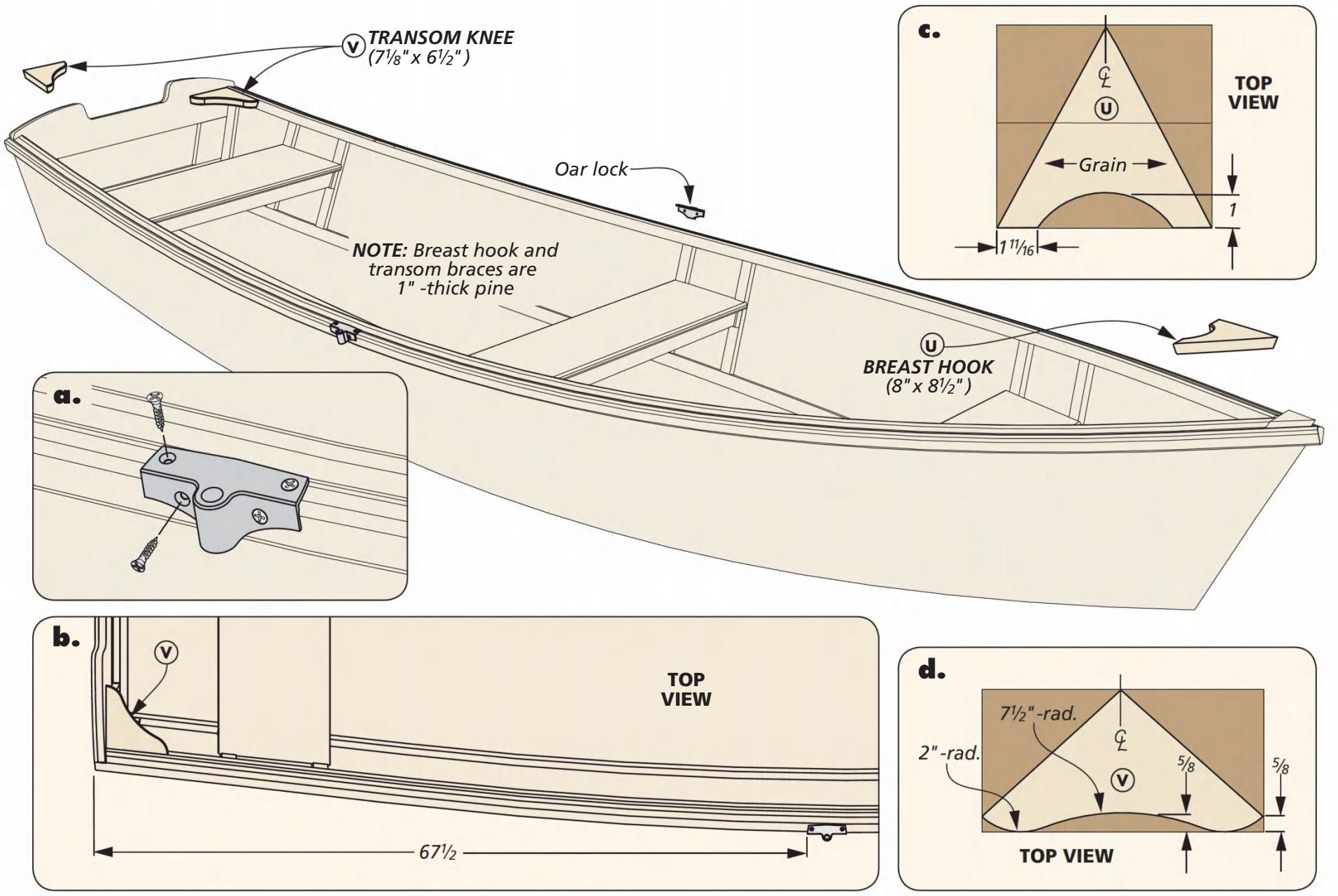

Final **DETAILS & FINISHING**

The building, at this point, is pretty much done. There are three pine braces that are added. Two in the back and one up front. You can see these above. Cut them from pine using the band saw, tilting the table to cut the beveled sides (box below). Epoxy them in place. These are the perfect location for a couple of rope cleats.

ANGLED BRACES

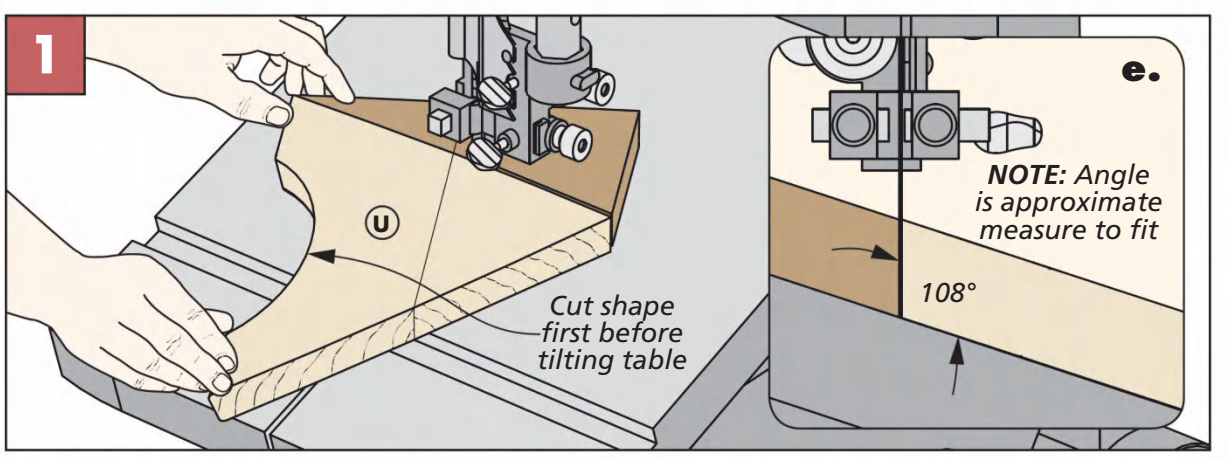

Shape & Angle. Cut the braces to shape. For the beveled edges, tilt the table on your band saw to match the angle of the boat sides (found using a bevel gauge).

OAR LOCKS. Of course, you could use a small electric trolling motor on the transom to get around. But, for the sake of aesthetics, I would suggest a set of oars.

Side note: Oars are for rowing. You row facing backwards. Paddles are used with a two-handed grip and you paddle facing forwards. Every time someone asks about my canoe trips and they say "How do you row your canoe that far?," a vein pops out in my forehead. Boats are rowed. Canoes are paddled. Rant over. Oar locks can be screwed directly to the gunwhales.

FINISHING

Now, I'm not going to lie. The finishing on the boat can be tedious. I left it to the end as a little surprise. You're welcome.

SANDING & EPOXY. The first thing to do is sand the boat down. Get any excess epoxy globs off, and trust me — there will be excess globs. They sand easily however. The next step is to waterproof the boat and add fillets anywhere water could gather. A fillet is simply a thick epoxy bead applied like caulk. Then, roll on a coat of epoxy to the entire boat surface. Let it dry and add another coat. Multiple thin coats is best.

Finally, you're ready to paint. Scuff the epoxy and apply a coat of oil-based marine primer (made for epoxy or fiberglass). Then, add a coat or three of your preferred color. Fair warning — you will have to allow ample drying time (days) for the epoxy and paint between coats.

Once your final coat of paint is dry, you're ready to christen your new boat and shove off. Now, I just have to figure out how in the world I'm going to find the room, and time, to build mine. W

WEST SYSTEM EPOXY SETUP

► There's a lot of epoxy used in the construction of this boat. *West System* epoxy is one of the most common marine grade epoxies. There are many different hardeners and resins available from *West System*, but the ones we used are the 105 resin, 205 hardener, and the 406 thickener for filling screw holes. An additional article on using epoxy as a finish on projects other than boats, can be found on page 56.

Materials, Supplies & Cutting Diagram

A	Bottom (1)	3/8 ply - 40 x 160	**I**	Sides (2)	3/8 ply - 24 x 174 1/2	**Q**	Middle Braces (2)	3/4 x 1 1/2 - 44 3/4
B	Transom Back (1)	3/8 ply - 18 x 38	**J**	Gunwhales (6)	3/4 x 1 1/2 - 175 rgh.	**R**	Middle Seat (1)	3/4 x 11 1/2 - 44 3/4
C	Transom Top (1)	3/4 x 6 1/2 - 37 1/8	**K**	Stem Brace (2)	3/4 x 1 1/2 - 20 1/16	**S**	Rear Braces (2)	3/4 x 1 1/2 - 37 5/16
D	Transom Bottom (1)	3/4 x 4 - 32 1/2	**L**	Transom Brace (2)	3/4 x 1 1/2 - 12 5/8	**T**	Rear Seat (1)	3/4 x 11 1/2 - 37 5/16
E	Transom Sides (2)	3/4 x 4 1/2 - 7	**M**	Seat Braces (12)	3/4 x 1 1/2 - 14 3/4	**U**	Breast Hook (1)	1 x 8 - 8 1/2
F	Stem (1)	2 5/8 x 3 1/2 - 25 7/16	**N**	Seat Cleats (6)	3/4 x 2 1/2 - 11	**V**	Transom Knees (2)	1 x 6 1/2 - 7 1/8
G	Chine Log (2)	3/4 x 1 1/2 - 160 rgh.	**O**	Front Braces (6)	3/4 x 1 1/2 - 30 5/32			
H	Center Rib (1)	3/4 x 3 - 160 rgh.	**P**	Front Seat (1)	3/4 x 11 1/2 - 30 5/32			

- (1) 5# box of #8 x 1 1/2" Fh SS Woodscrews
- (1) 5# box of #8 x 1" Fh SS Woodscrews
- (1) Pair of Oarlocks with Oars
- (1) Gallon of Epoxy w/ Hardener
- (1) Epoxy Thickener

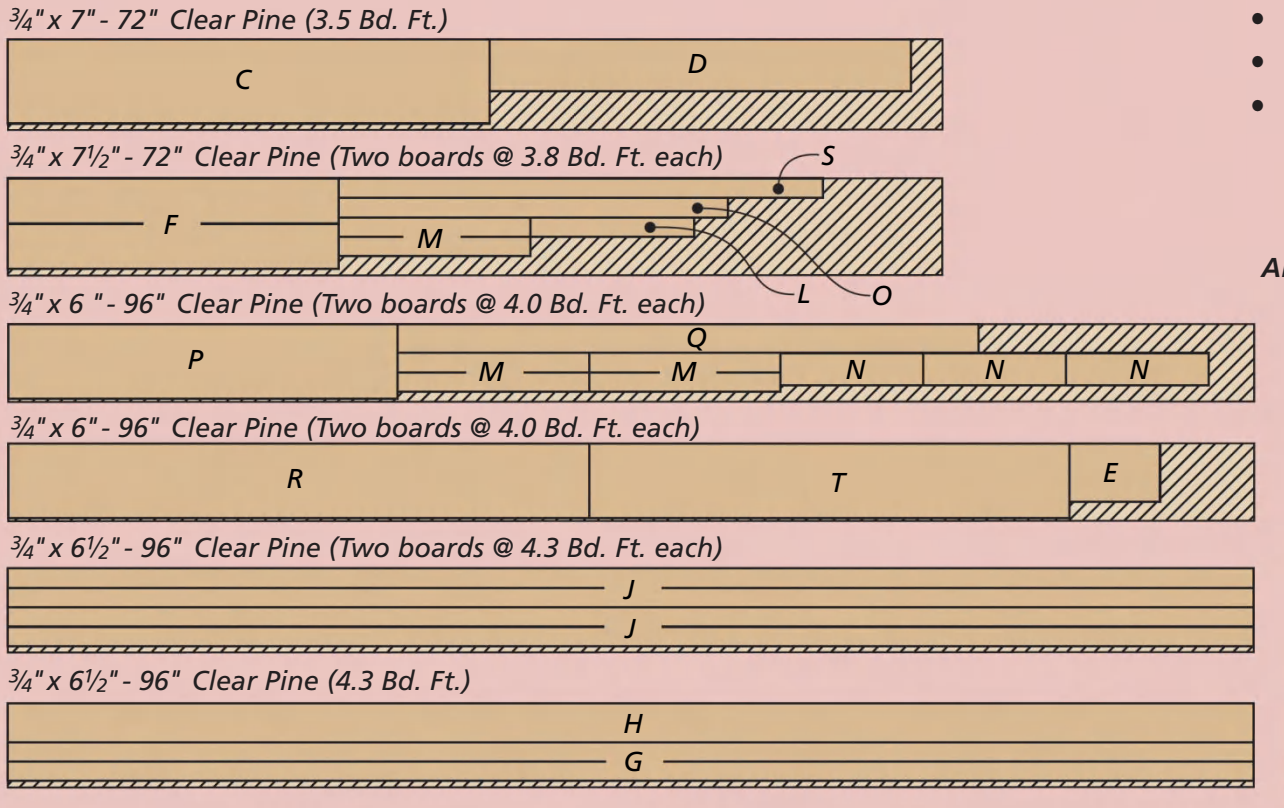

ALSO NEED: *Four 48" x 96" sheets of 3/8" plywood*

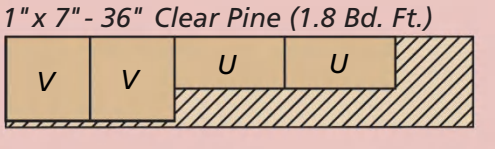

Glass-Smooth Epoxy Surface

Versatile epoxy fills pores and creates a smooth, durable moisture barrier for a fine furniture finish.

One of the hallmarks of the hull of a boat (page 44) is a finished surface that's smooth and waterproof. It also should reflect light evenly without any noticeable surface variations.

While the finish on our boat is for waterproofing, a smooth epoxy finish looks great on other projects as well. Achieving a glass-smooth surface like this can be difficult, however. The issue is that many wood species have open pores that draw the finish below the surface of the wood. This can result in a finish that may be smooth, but appears to have "texture."

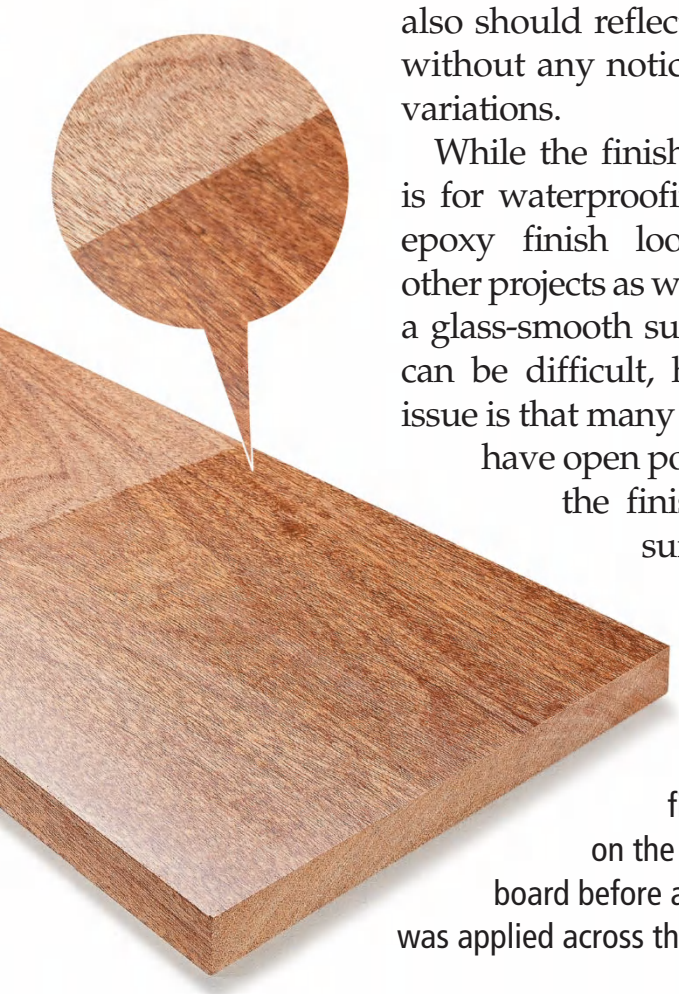

◄ Pores were filled with epoxy on the right half of the board before a coat of varnish was applied across the entire surface.

The key is to fill the pores before applying a finish coat. I have used various paste-type pore fillers over the years. And while they work great at filling the pores, it can be difficult to match the color of the filler to the wood. The result can be an unnatural finished appearance.

One solution I started using in my shop is epoxy. This durable, crystal-clear alternative makes it simple to produce a perfectly smooth surface on your projects without any color variation. And it's compatible with most topcoats.

RESULTS. The margin photo to the left shows the end result. An additional benefit to using epoxy as a pore filler is it can help protect your finished project by providing an excellent barrier against moisture. There are a few important considerations to pay attention to for a successful result. So I'll walk you through the process I use.

SURFACE PREPARATION

As with most finishing procedures, success starts with surface preparation. Epoxy needs to create a mechanical bond with the wood surface in order to adhere to it. This means sanding the surface of the wood to no more than 120-grit, depending on the species of wood.

And when working with oily woods like cocobolo or rosewood, be sure to remove the surface oil by wiping the wood with acetone or lacquer thinner shortly before applying the epoxy.

TEMPERATURE. Another point that shouldn't be overlooked is the temperature of the wood relative to the ambient temperature of your shop. It's

▲ Very little epoxy is needed for pore filling, so it's easiest to use a scale to ensure you get the right proportion of resin and hardener.

▲ Spread the epoxy over the surface of the wood to get a thin, even coat. Work at a 45° angle to the grain to force the epoxy into the pores.

important that the wood acclimate to the shop temperature before applying the epoxy. A little patience here will pay off.

And once the epoxy has been applied, try to limit any substantial increases in the temperature of the shop before the epoxy has fully cured. The concern here is that when the temperature of the wood increases, there is the possibility of the wood out-gassing. This could result in bubbles or pinholes in the finished surface.

MIXING THE EPOXY

I use *West System* epoxy in my shop. This requires mixing the epoxy resin with a hardener before each application. You'll be surprised at how little epoxy is needed to fill the pores. This is the reason why I used a scale to mix very small batches of epoxy by weight (photo above).

After mixing the two parts, you'll have approximately 20 minutes to cover the surface of your project before the epoxy starts to harden.

MIXING THE APPLICATION

Applying the epoxy isn't difficult. You start by pouring a small amount in the center of your project, like in the main photo on the opposite page. With a rubber squeegee, spread the epoxy across the surface at a 45° angle to the grain. You'll want to use light pressure until the entire surface is covered. Then increase pressure to create a very thin coat, cleaning the excess epoxy off the squeegee with a rag.

After the first coat has dried for about 10 hours, sand lightly with 320-grit paper. Apply and sand additional coats in the same manner until the pores are completely filled, and you have a smooth surface. The mahogany shown here took two coats. Finally, use an ultra-fine abrasive pad to smooth the entire surface before applying a final topcoat of varnish or other finish (photo above). The end result is sure to impress. W

▲ Use an ultra-fine abrasive pad after the final coat has cured. This prepares the surface for adding a topcoat.

EPOXY TINTING

Applying epoxy to your project completely seals the wood surface. So if you intend to stain the wood, you'll need to do it before topping it off with the epoxy.

Another option is to add aniline dye stain powder directly to the epoxy mixture. Alcohol-soluble dyes dissolve better than water-soluble versions, but either can be used. And you'll want to experiment with the amount of dye to add so that you get the right color. These powders are generally highly concentrated, though, so you'll find you won't need to add much.

When using dyes, it's best to add the powder after the resin and hardener have been thoroughly mixed. This helps ensure that the epoxy will cure properly.

The quarter-sawn white oak in the photos to the right show the effect of adding dye stain to the epoxy. Give it a try in your shop and see how it can work for you.

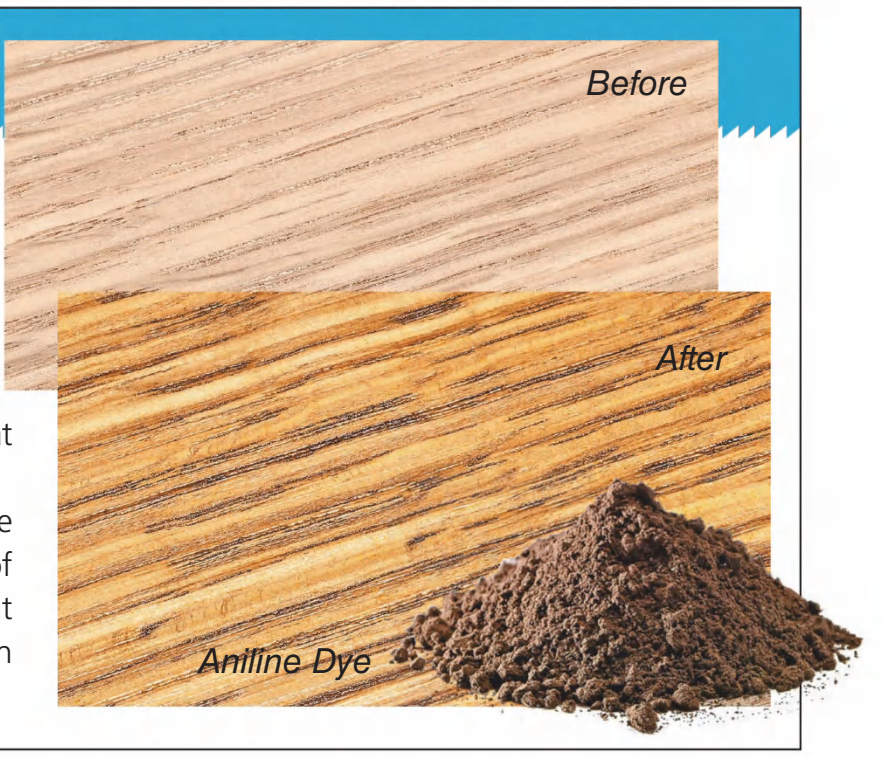

Sharpening Jigs for Carving Tools

There's little doubt that woodcarving is the wild child of the woodworking world. The projects that woodcarvers tackle are limited only by their imagination and the tools they have. So, it stands to reason that to fulfill the dreams and visions of these woodcarving Mozarts the tools in their orchestra will come in a vast array of sizes, shapes, twists, and turns. (Like the spoon gouge you see above.)

That's all fine and good until you cross the tripwire that comes with all tools used to cut wood — the need for a razor-sharp edge. As you know sharpening chisels and plane irons are a craft. Woodcarving tools with their complex shapes and delicate edges raise the sharpening bar to a whole different level. Arriving at an acceptable edge has long been quarantined to the province of sharpening by hand. The grim fact that sharpening a carving

Written by: Erich Lage

tool is often harder than doing the carving, has made many a soul shy away from this craft. But you have an ally in this struggle — water-cooled sharpening.

WATER-COOLED SHARPENING

The *Tormek* water-cooled sharpener that you see here is what I've relied on for years. It's a complete system that begins with a machine that has a grindstone on one end, and a leather honing wheel on the other. The system has a large group of mating jigs that allow you to sharpen and hone almost any piece of steel that has an edge.

Veterans of hand sharpening make the valid point that these systems take more time than doing work by hand with stones, slips and strops. But for me it's a compromise that I'm willing to live with so that I can return to the fun at hand — carving wood with sharp tools.

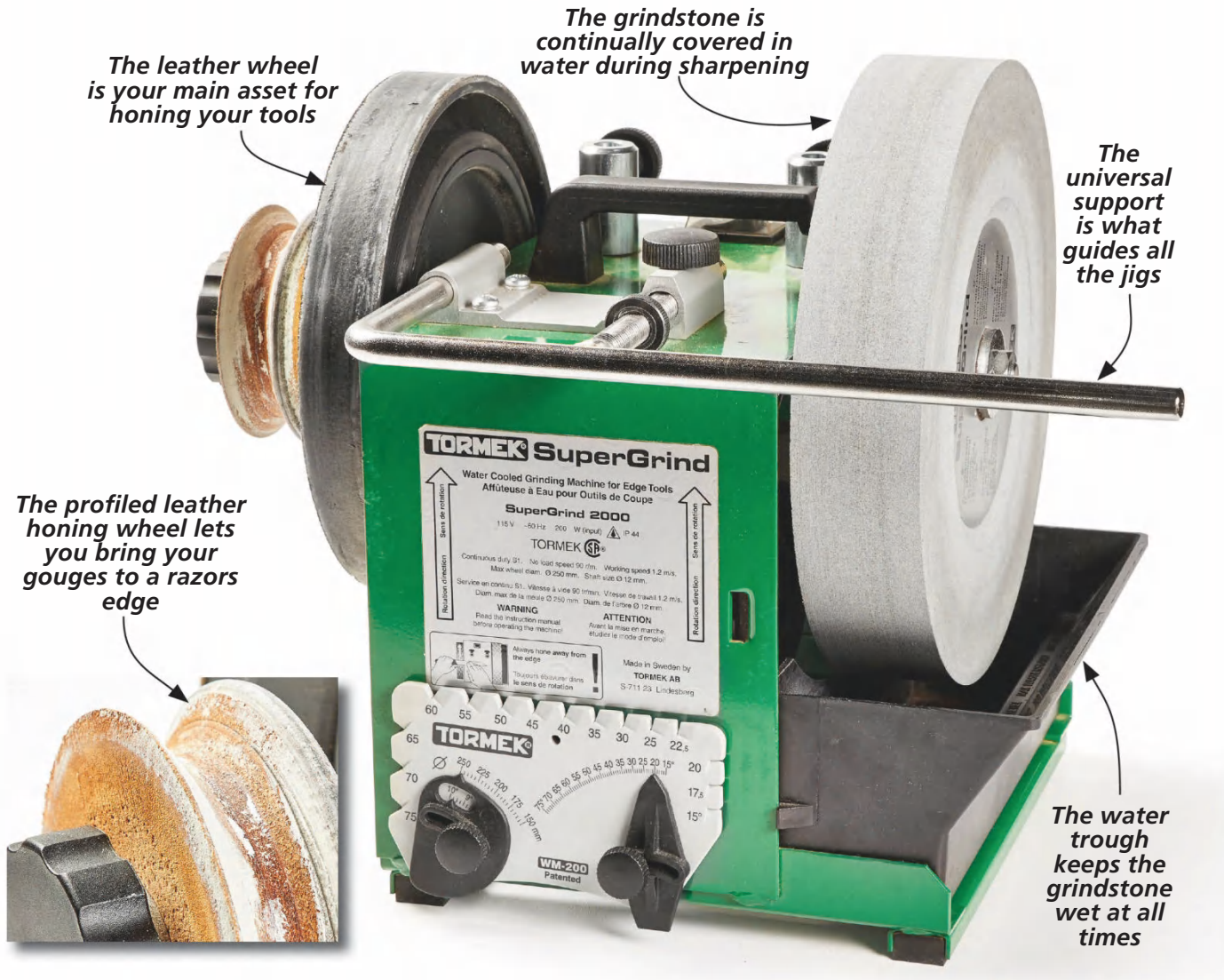

▲ *Tormek's* water-cooled sharpening systems will give you confidence when sharpening your tools.

THREE JIGS TO RULE THEM ALL.

Here, I'm going to focus on the three jigs that will address sharpening all of your carving tools (and your wood turning tools as well). They're shown below along with a few of the tools that they're designed to sharpen.

The jigs ride on or against a bar called the universal support. The support is moved towards or away from the grindstone and honing wheel depending on the profile of the tool being sharpened or honed. Thanks to *Tormek's* design integrity, the newer versions of the jigs we're using here work just fine on my "vintage" machine.

OPTIONS. The support can be used vertically, for more aggressive sharpening. Or, as in all our examples, horizontally, for a gentler, more controlled way to sharpen. Below there's a brief description of each jigs strength.

THE END GAME. There are three steps involved in bringing a carving tool up to snuff. Setting the profile, establishing the bevel, and making the edge cutting ready. Every carving tool in your arsenal will relate to these rules in their own unique way. On the following pages we'll help you chart a path that works for the tools in your roll.

▼ The three jigs you see here will sharpen and hone all of your woodcarving tools.

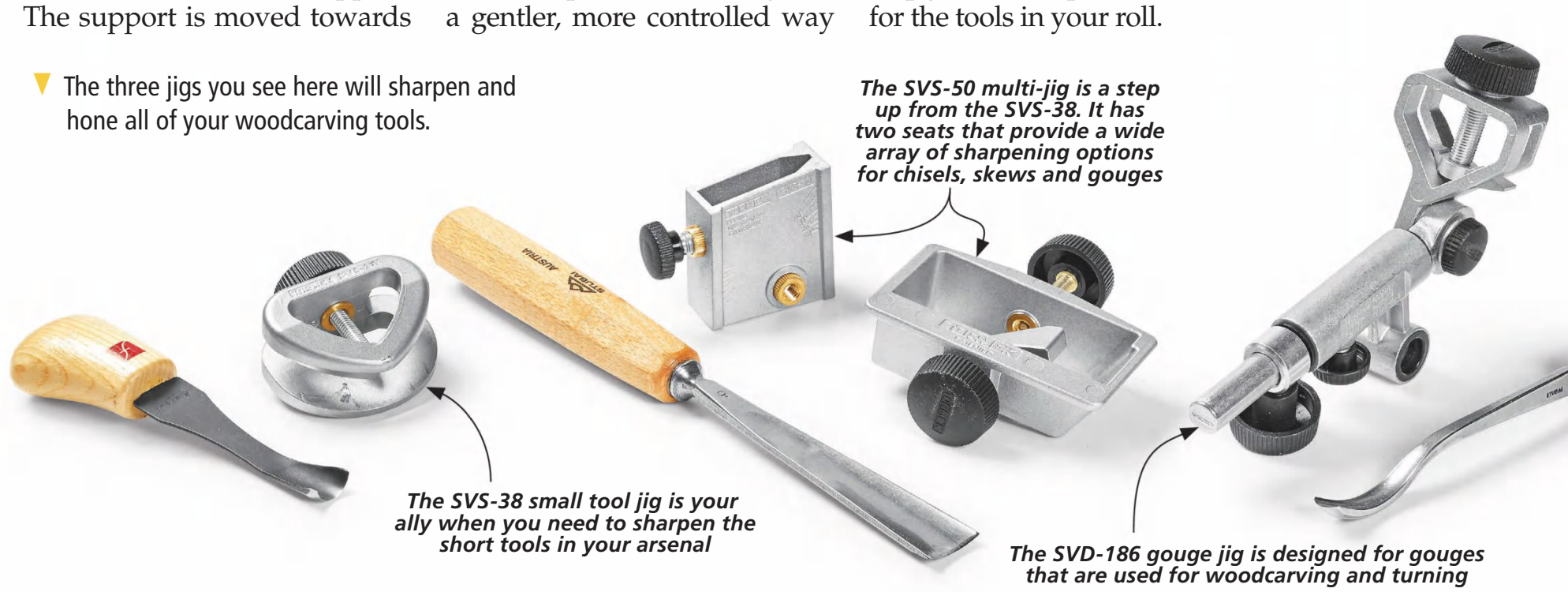

Illustrations: Bob Zimmerman

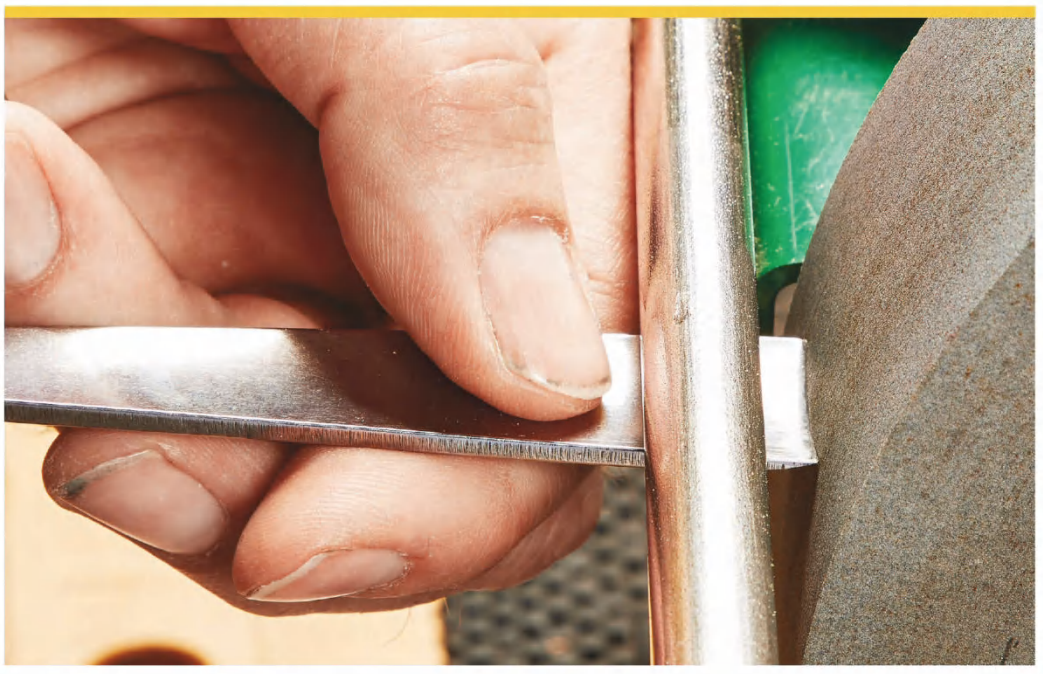

A light touch is all that's needed to square the tool. Using the underside of the support lets you focus on keeping the tool square to the grindstone.

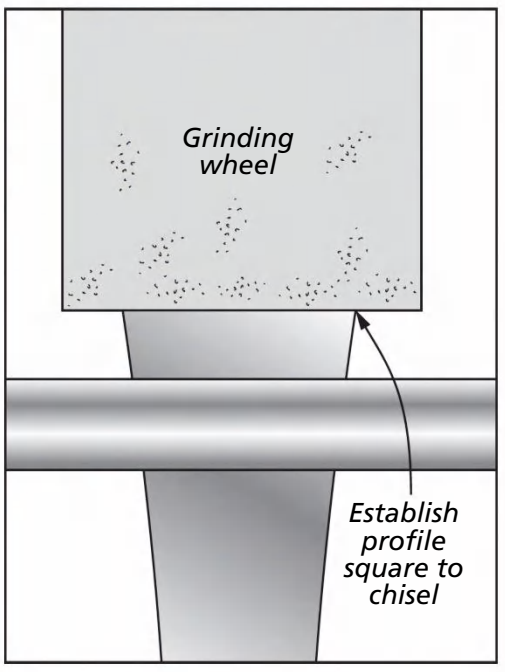

PROFILE FIRST

When speaking of the profile of a woodcarving tool, I'm talking about the relation of the cutting edge to the shaft of the tool. The drawing above shows the results we're looking for. The profiles of all the tools we're working on here are 90° to the shaft.

To be clear, I know there's a lot of carving (and turning) tools that have curved profiles. Or uniquely shaped for the cutting task they're designed to do. The last jig shown here is the one you'll want for those complex edges. Here we're touching on the fundamentals.

With that in mind, let's turn to the task at hand, squaring the profile of the tool. You're not using a jig for this step. But you will use the universal support. The photo above shows this. The support serves as a stop for the tool, letting you focus on keeping the tool square to the wheel.

SEE THE LIGHT. When the tool is square, you'll notice you've blunted the edge of the tool. This blunt surface is known as the "line of light". The goal is to grind the tool until that line disappears. Before you can do that, you first have to establish the bevel. Here's where the jigs come into play — the first example is the one you see below.

FIND THE BEVEL (LOW TECH)

Regardless of the jig, the distance of the universal support from the grindstone dictates the angle of the bevel on your tool. When you want to match the existing bevel of a tool, the easy way is to employ a permanent marker.

This low-tech way of matching the angle of the bevel to the grindstone or honing wheel is simple, just color the whole surface of the bevel with the marker Once colored, hold it against the support and turn the wheel by hand to reveal its relation to the wheel. (Photos below.)

The grindstone removes the marker where they touch. All you need to do is adjust the support according to the results. The drawings below shows the three results that you'll get during this test and how to adjust for them.

The *SVS-38* combined with a permanent marker lets you put razor-like edges on small tools without overheating them.

With the tool properly seated in the jig and the bevel "colored," hold it against the support and turn the grindstone away from you.

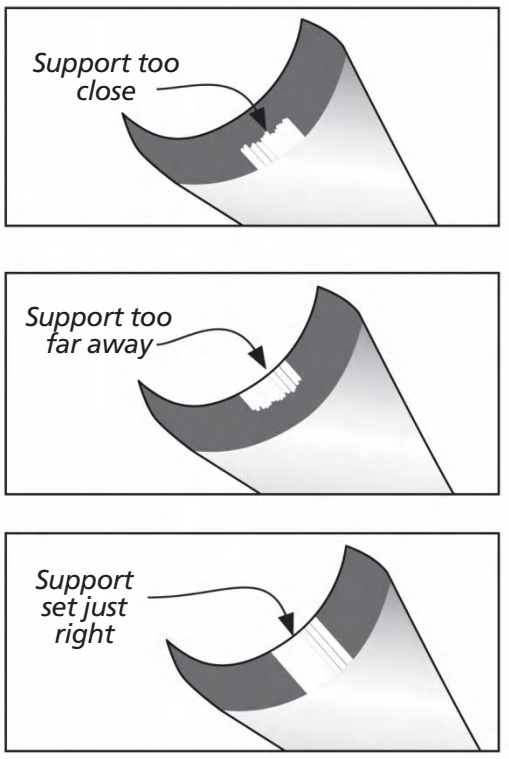

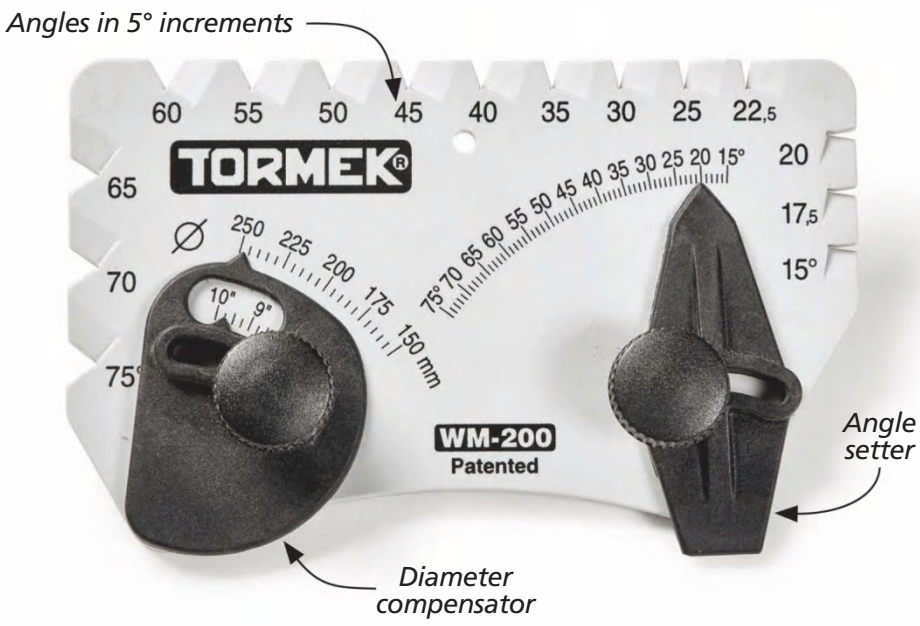

The *Angle Master* is the bevel liaison between the grindstone and your tool.

SET THE BEVEL (HIGH TECH)

There are occasions when you want to put a specific angle on one of your woodcarving tools. Or, you want to modify a chisel for a different task. For instance, the bevel on a tool that you're using a mallet with is different (steeper) than the edge needed for hand carving.

Setting exact angles is the wheelhouse of the tool you see above left. The *WM-200 Angle Master* is the go-to tool for controlling angles. For your convenience, it's notched around the edges with example angles that increase in 5° increments. Below that are two adjustable dials. The one on the left is for registering the diameter of your grindstone, which diminishes over time. The other dial is the angle setter, which does just that. The photo above right shows the tool in action on the machine.

FINDING THE CUTTING EDGE

Now that you've set the profile, and the bevel, it's time to start grinding. The goal is to remove the "line of light" that I mentioned earlier. You can see an example of this in the drawing to the far right below.

GET THE RHYTHM. There's a basic sequence here regardless of the jig you're using. You want to keep the jig and tool parallel to the grindstone, and moving back and forth across the surface of the wheel. The amount of pressure you apply is an acquired touch. A larger, thicker tool can take more pressure than its smaller counterpart.

Along the way, you'll need to look at the edge of the tool to examine your progress. Often, the line of light will not be an even edge across the tool. So you might have to grind more in one area to even things out. When the line of light is gone, the tool is ready to be honed. Hone the tool by rolling it back and forth on the leather wheel and profile wheel as shown below.

Once all your woodcarving tools are sharp, some touch up honing is all it takes take to keep the edge singing and slicing through wood. W

The way the *SVD-186* moves and articulates across the grindstone takes a little getting used to. The fact that the stone cuts lightly gives you time to adjust

Regardless of the jig you're using you can flip the support, locate the bevel, and hone the tool. Or free-hand hone like you see here.

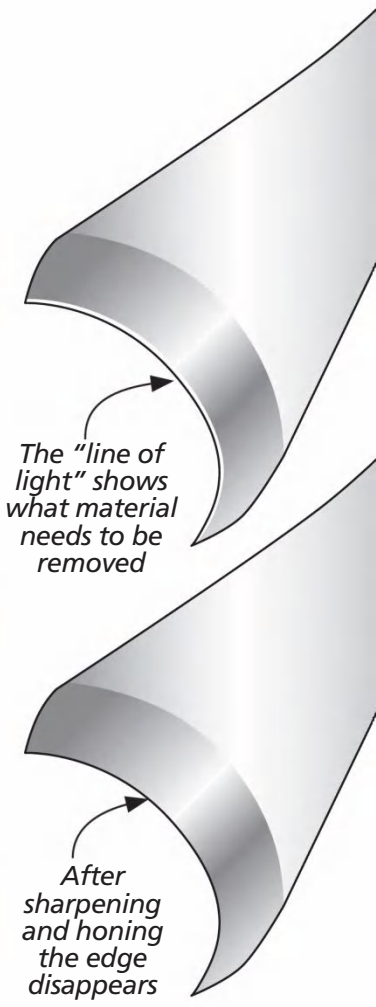

Avoid Kickback

Every woodworker fears being cut by their table saw. We know we must stay alert whenever the saw is on. We would never put our hand in the path of the blade.

But while it is possible for a distracted woodworker to inadvertently push his hand into a spinning saw blade, amputations and injuries are more commonly caused by the workpiece pulling your hand into the danger

Written by: James Hamilton

zone through a process known as kickback. Table saw kickback may also eject a workpiece from the saw with tremendous bone-breaking force.

Fortunately, the risk of table saw kickback may be greatly reduced and the chance of injury all but eliminated if you learn how kickbacks occur and what simple rules you should follow every time you use your saw. This article will examine six common causes of kickback and how to avoid them.

A riving knife is the number one preventer of kickback. When cutting a board with stresses in it, a riving knife will prevent the kerf from closing around the blade. It's worth noting that thin-kerf blades may not work with every style of riving knife.

KICKBACK #1- THE CLOSING KERF

CAUSE. As a tree grows, internal stress may develop within the wood fibers. Poor drying techniques or conditions may also lead to case-hardening which can also create stresses within the board. These are usually undetectable until you begin to rip it. During the cut, that stress is released and this may cause the kerf to close, pinching against the rear of the spinning blade.

SOLUTION. Install a splitter. If a splitter or riving knife is installed behind the blade the kerf will pinch against it rather than the blade itself. Splitters and riving knives are the number one way to prevent table saw kickback.

In addition, many saws will come with a set of pawls, as you see in the main photo. These toothed "feet" only allow the workpiece to be fed forward and can help prevent kickback.

KICKBACK #2- THE SHIFTING BOARD

CAUSE. Rough lumber that is not flat and straight can perform in unpredictable ways. A cupped board may collapse downward as it is cut. A warped board may rock from one side to another as it's fed. And a crooked edge may cause the trailing end of a board to shift as the leading end begins to clear the fence. All these situations may result in pressure against the side of the spinning blade and potential kickback.

SOLUTION. Don't cut rough lumber on a table saw unless you have a straight edge against the fence, and one flat surface on top of the saw. If your board is too wide for your jointer, rip it with a band saw or handheld jig saw rather than a table saw.

Often, riving knives have a set of pawls on them. These teeth allow the workpiece to be pushed through the cut, but won't allow it to go backwards, reducing kickback.

If the table saw must be used for cutting rough lumber, you can use a sled like the one shown in the lower left photo. It holds the workpiece firmly to a base. The base slides in the miter slot and allows you to cut a straight edge with the workpiece held tightly down.

Another helper for boards that may shift are featherboards. You can see these in the main photo. These help hold the workpiece firmly against the fence and down to the surface of the table saw. These are particularly useful if you're cutting thin, floppy stock (such as molding), or for helping guide big, heavy boards.

A simple sled like this one will help cut a straight edge on rough cut boards. The hold downs keep the workpiece secure and a miter bar on the bottom side of the sled guides the workpiece.

Illustrations: Bob Zimmerman

KICKBACK #3- THE TWISTING WORK PIECE

CAUSE. If a workpiece turns toward the blade during a cut, the rear teeth may lift and pull the workpiece (and possibly the operator's hand) on top of the blade. This is most common when working with small pieces of wood that lack enough edge length to be kept straight against the fence. A sure sign that this type of kickback has occurred is a curved cut mark left in the surface of the board as it turns over the top of the blade.

SOLUTION. Always use a push-stick or push-block when your hand is near the blade, and position it near the center of the workpiece to ensure a straight feed. Protect the blade's rear teeth with a riving knife or splitter.

▲ The push-block keeps the operators hands a safe distance away from the blade. A longer push-block allows more control of the workpiece as you make the cut, allowing you to keep it tight against the fence.

KICKBACK #4- THE MISUSED FENCE

CAUSE. If used improperly, a rip fence can trap an offcut against the blade, causing a kickback. This may occur if, while attempting to make a crosscut with a miter gauge, the end of the board is placed against the rip fence, perhaps as a stop for making repeated cuts of the same length. The loose offcut is all but certain to turn and wedge itself against the spinning blade. Another dangerous situation may involve attempting to make a crosscut without a miter gauge by holding the short end of a rectangular board or panel against the rip fence. If the workpiece twists during the cut, kickback is most likely to occur.

SOLUTION. Rip fences are made for ripping, miter gauges and sleds should be used for crosscutting. The two should not be used at the same time. (Exception — when cutting a rabbet or tenon on the end of a workpiece where no loose offcut will be produced.)

As a general rule for small and medium sized panels, check the distance between the blade and the rip fence. If that is greater than the length of the etdge that must be held against the fence, use a sled or miter gauge rather than a rip fence to make the cut.

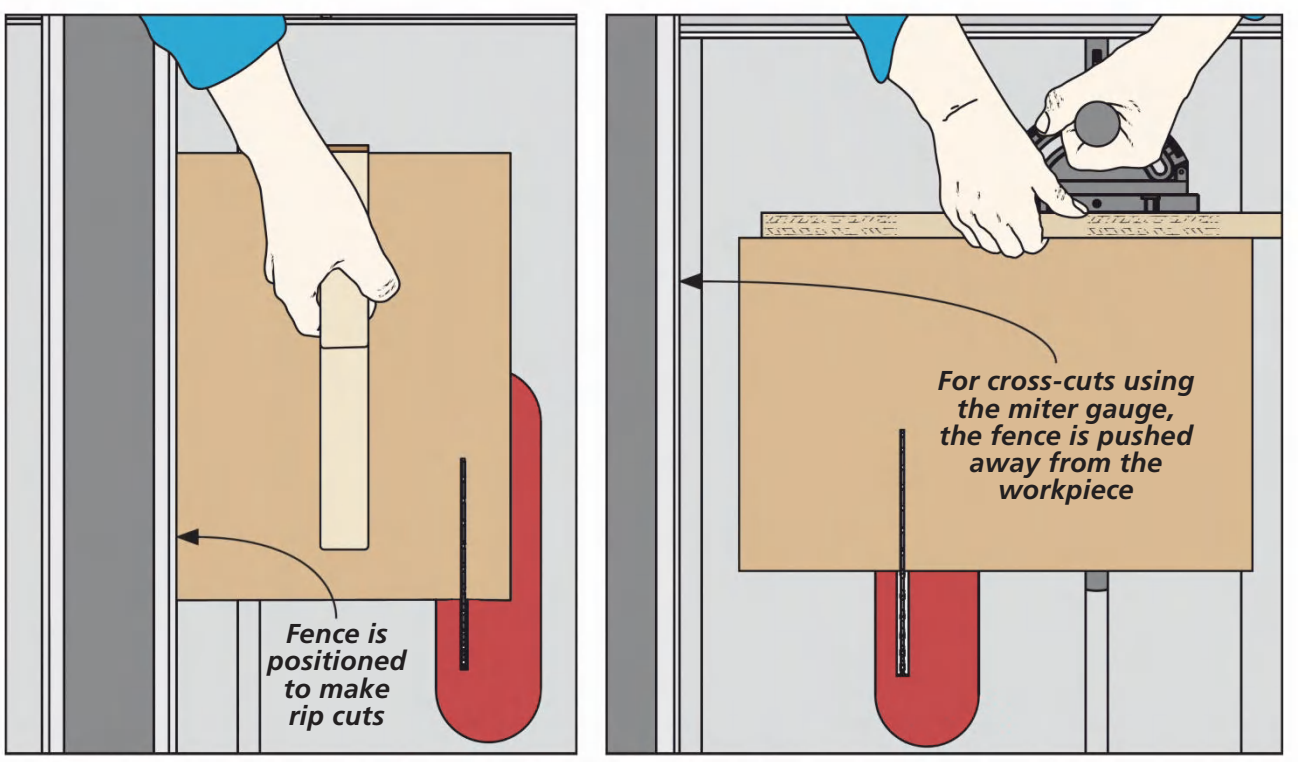

Pinched Pieces. Rip fences and miter gauges are not meant to be used together. Use the fence to make rip cuts (left illustration). When using the miter gauge, as seen in the right illustration, make sure the fence is pushed away as to not pinch the offcut.

KICKBACK #5- THE MISALIGNED RIP FENCE

CAUSE. If a rip fence is nearer to the rear of the saw blade than it is to the front, it will produce a wedging effect on your workpiece. This often causes scorched edges with blade marks and increased resistance during rip cuts, but it may also lead to a board being ejected toward the operator.

SOLUTION. Both the saw blade and the rip fence must be parallel to the miter slots so you may be sure they are also parallel to each other. You can see this in the photo at right. Some may choose to angle the rear end of their rip fences away from the blade by a small amount, perhaps 1/32-inch. Either solution is acceptable.

Take some time to verify that your rip fence is aligned with the blade. This elimates "drift" during the cut that can cause kickback. Some people prefer for the outfeed side of the fence to be slightly further away from the blade.

KICKBACK #6- LOOSE OFFCUTS

CAUSE. When making repeated crosscuts on multiple workpieces, such as trimming workpiece ends square, the loose offcuts may begin to accumulate next to the blade. Saw vibration can cause one or more of them to work their way toward the blade. If the offcuts get close enough and does contact the blade, a tooth may catch it and eject it towards the operator.

SOLUTION. Do not let offcuts accumulate on top of the saw. A sacrificial fence on your miter gauge that extends past the blade will push the offcuts clear of the danger zone with each cut. You can see an example of this miter fence below.

The common theme with most table saw kickbacks are that they are initiated by the rear, rising teeth of the saw blade. The most effective preventive measure you can take is to install a riving knife or a splitter for every cut.

If your saw is not equipped with such a device, you may make your own insert from plywood or MDF with an integrated homemade splitter. If your saw is a newer model, more than likley it came with a riving knife. If it's missing, you can often call the manufacturer and purchase a replacement. It's money well-spent. This will protect the rear of the blade and signifigantly reduce many common causes of kickback.

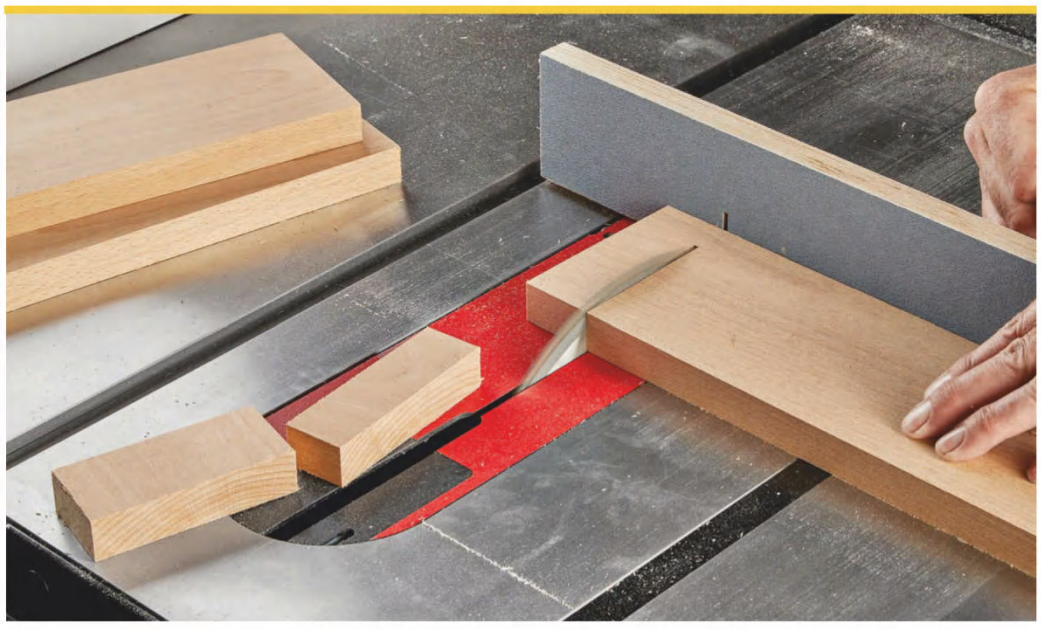

Using a sacrificial fence on a miter gauge has two main purposes. First, it helps reduce tearout by backing up the cut. Second, when you make a cut it will push any small offcuts past the blade.

FINAL ADVISE

Additionally, always use a push stick or push block if your hand will be anywhere near the blade. If a kickback does occur, it's better for the push stick or push block to take the damage rather than your hand.

Finally, when making rip cuts, position your body on the side of the blade opposite your rip fence. If a board is ejected it will be more likely to go past you rather than directly toward you.

Table saw kickbacks should be understood more than they are feared. The safety-minded, proactive woodworker can all but completely eliminate the risk from a table saw and and enjoy many years of injury-free woodworking. W

Runners for Jigs

? When building a table saw sled, what is the best wood to use for the runner in the miter slot, that has the least amount of expansion and contraction?

Walter Pinkman
Facebook

A miter bar for a table saw jig (or any jig, really) needs to slide easily in the miter slot. But, if it's too loose, your jig won't be very accurate. And if it's too tight, it's hard to use. You're looking for just the right "feel" where it's snug but slides with little effort. There are several options to consider.

WOOD. As a woodworker, the obvious choice is to use wood. For a quick miter bar, make one from your wood scraps. The advantage of wood is that you can easily fine-tune the size for a just-right fit. The problem is that the miter bar can expand with increased humidity.

To minimize swelling and shrinking that occur with changes in humidity, stable hardwoods are best (like oak or maple). Choose quartersawn stock if you can. This way the bar won't expand or contract in width much with changes in humidity levels in your shop.

ALUMINUM. You can buy ⅜" x ¾" aluminum bar stock. It's soft enough that you can drill and file it. Once you get a good fit in the miter slot, there should be little need to adjust it later.

For a miter bar that ends up a little too loose, you can apply layers of aluminum adhesive-backed tape. This tape is made for sealing heating ducts and is thin to achieve a good fit.

UHMW. Ultra high molecular weight (UHMW) plastic is durable and easy to work. It's also available in ⅜" x ¾" stock. It's low-friction, so it's ideal for miter bars. You can fine-tune the fit for your miter slot using woodworking tools.

AFTER-MARKET BARS. A final choice is a manufactured miter bar available online. These aluminum or steel bars are more expensive than a DIY approach. But the advantage is that they often include adjustment mechanisms. These can be set screws, wedges, or cams so you can dial in the fit that you need. W

Written by: Phil Huber

Product Showcase

SUPER MET-AL Wood Filler Floor Repair Stick

Our specially designed Floor Repair Stick will give you a professional look when repairing scratches and nicks on Wood, Concrete, Laminate, Vinyl floors and surfaces. Made in USA. FREE Samples Call: 1-800-851-8464

www.skmproducts.com

Knew Concepts Heavy Duty Fret Saws

Knew Concepts fret saws are the stiffest saws in history. Stiffer saws mean better control of where the blade cuts. Isn't better control always a good thing? Made in Santa Cruz, CA.

www.knewconcepts.com

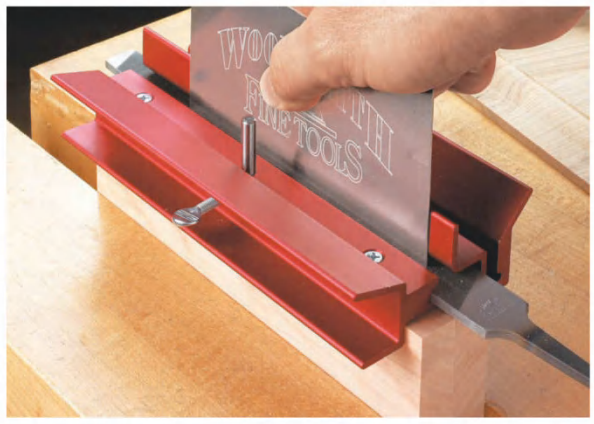

Woodsmith Cabinet Scraper System

The Woodsmith Cabinet Scraper System offers a fool-proof method for getting a consistent, razor-sharp edge using only a few simple tools. The secret is in the Woodsmith jig — a unique tool that lets you file the edge and then create a bur.

https://store.woodsmith.com/products/7512124

Sources

Most of the materials and supplies you'll need to build the projects are available at hardware stores or home centers. For specific products or hard-to-find items, take a look at the sources listed here. You'll find each part number listed by the company name. See the left margin for contact information.

SPECIALTY ROUTER BITS *(p.10)*

- **Infinity Cutting Tools**
  - *Mini Mega Set* 00-693
  - *Slot Cutter Set* 00-236
- **Amana Tool**
  - *InTech Bits* . . . . . Varies
  - *Countersink Screw Slot* . . 55230
  - *Flat Screw Slot* 55232

ALL ABOUT SANDPAPER *(p.18)*

- **Zoro**
  - *Iridium Discs* . . . . . varies
  - *Gold Discs*. . . . . varies
  - *Gold Flex Pads* . . . . . varies
  - *Microstar*. . . . . varies
  - *Peel and Stick Basecut* . . . varies

LANTERN *(p.22)*

- **McMaster-Carr**
  - *Brass Bar Stock* 8954K36
  - *Binding Barrels*. 93813A332

WINE RACK *(p.28)*

- **Horton Brasses**
  - *5/8" Brass Knob* H-42-0.625
- **Lee Valley**
  - *1/4" x 36" Z-Clip* 00S1860

The wine rack was finished with *Varathane* "Traditional Cherry" gel stain. After staining, the rack was sprayed with a couple of coats of lacquer.

WORKBENCH *(p.34)*

- **Amazon**
  - *3" Powerscrew* . . .B00M82S3ZC
- **Lake Erie Toolworks**
  - *Wood Vise Screw*PREMIUM KIT

The bench was finished with butcher block oil. The wood screw is first coated with penetrating oil. Then rubbed with paste wax when dry.

BOAT *(p.44)*

- **Amazon**
  - *West System 105*. . B002M4110K
  - *West System 205* .B0002NY6SW
  - *406 Thickener*. B0006JJ9T8

The boat was painted with *Duralux* Marine paint in "White" and "Signal Red."

TORMEK *(p.58)*

- **Lee Valley**
  - *SVS-38* 68M0123
  - *SVS-50* 68M0126
  - *SVD-186* 68M0125
  - *TTS-100* 68M0142
  - *SE-77* 68M0177

MAIL ORDER SOURCES

Amana Tool
amanatool.com

Epivots
866-401-3510
epivots.com

Hartert-Russell-Home
615-431-1003
hartert-russell-home.com

Harvest Reclaimed
515-204-3139
harvestreclaimed.com

Horton Brasses
800-754-9127
horton-brasses.com

Infinity Cutting Tools
infinitytools.com

Lake Erie Toolworks
1-814-528-4337
lakeerietoolworks.com

Lee Valley
800-871-8158
leevalley.com

Magnate
800-827-2316
magnate.net

McMaster-Carr
630-833-0300
mcmaster.com

Rockler
800-279-4441
rockler.com

Woodcraft
800-225-1153
woodcraft.com

Zoro
Zoro.com

RIKON®

EXPANDING ⬅ The ➡ Possibilities

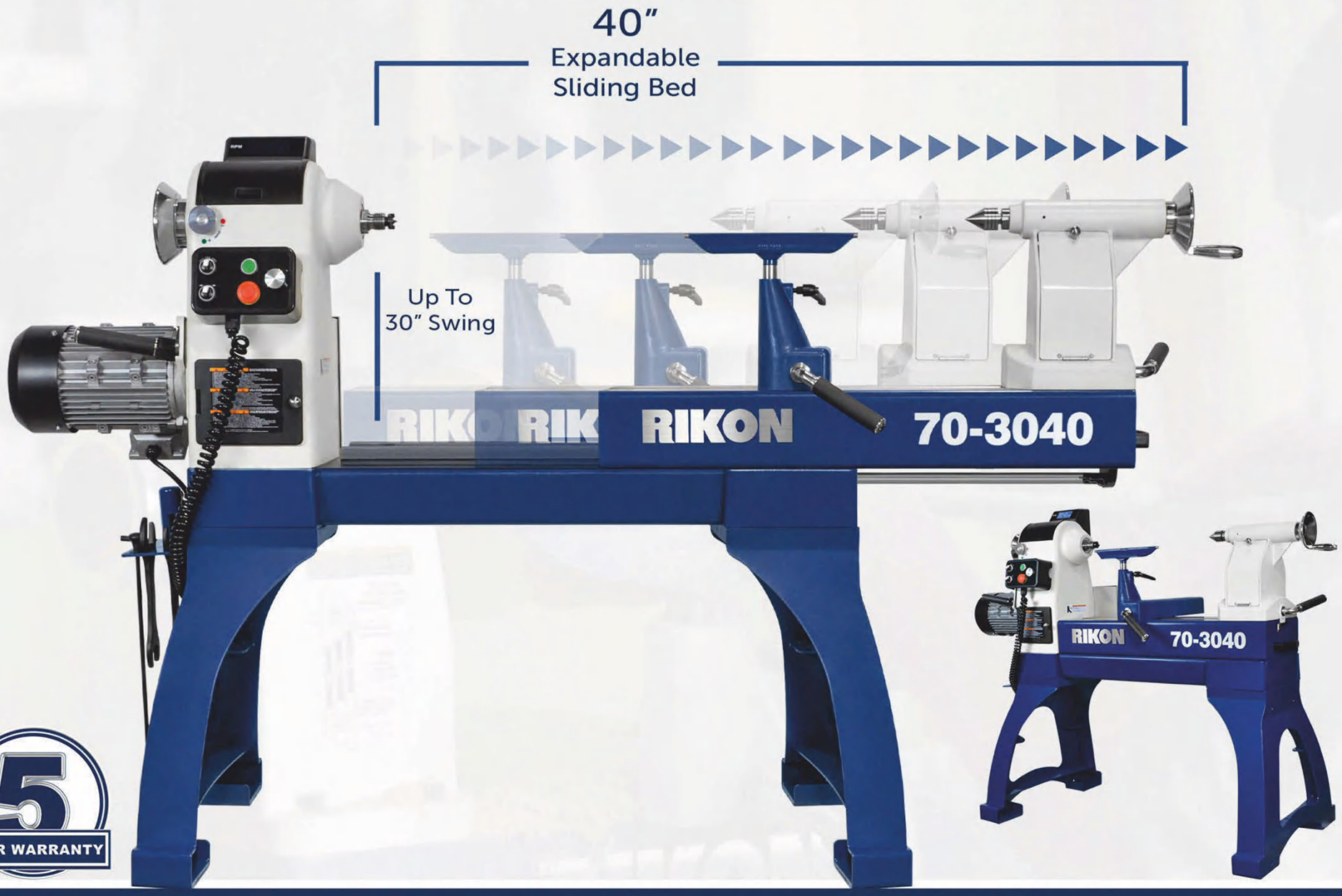

5 YEAR WARRANTY

Expandable Bed Lathe | 40" Between Centers Beefy | 3 HP VSR Motor

Beefy **3HP motor** delivers ample power to turn large diameter projects in forward or reverse modes.

Control Box has a magnetic back so that it can be set anywhere along the lathe for quick access when turning.

1-1/4" x 8 TPI threaded spindle is supported by 4 heavy-duty bearings for precise and dependable turning.

Tailstock's quill extends out to a generous **4-3/4" RAM** travel with precision Acme threading.

Call today for more information **877-884-5167**
or visit **www.rikontools.com** for a dealer near you!

Woodsmith

Back Issue Library **Online**

An Incredible **VALUE!**

- Access every issue of Woodsmith ever published — over 228
- Get over 4,000+ projects, tips and technigues.
- Enjoy instant online access on your computer, laptop — even tablet.

LEARN MORE at www.woodsmithlibrary.com

Sign Up for Free Weekly eTips

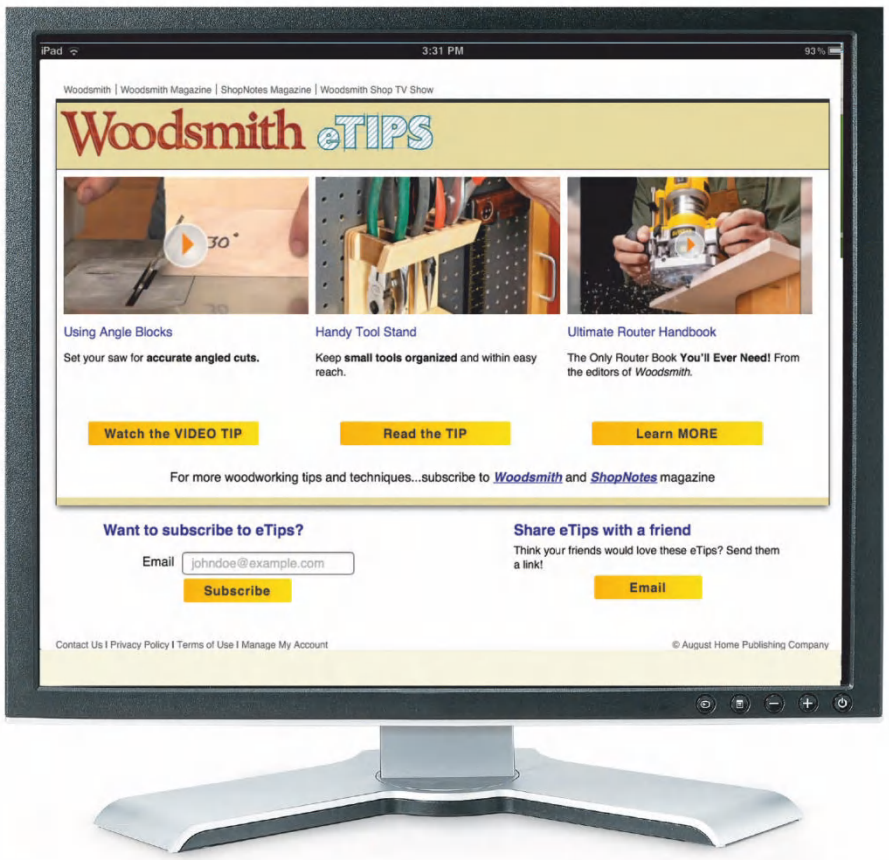

Desktop

- Get a video tip sent to you every week
- Includes a printable, step-by-step tip
- Ready when you are — on any device

Laptop

Tablet

Smartphone

Sign up today at Woodsmith.com